UNICEL
ARCHITECTURAL

VISION CONTROL®
FEATURES

1. A primary seal made of polyisobutylene is used for its high resistance against ultraviolet rays and is combined to a secondary seal made of high quality silicone.
2. The tubular profile contains a highly effective drying agent, providing moisture-free air space between glass panels.
3. The unique hollow-chambered louvers provide maximum rigidity and strength and maintain the parallel alignment of the blades for utmost privacy and light control.
4. The 2 1/2" (63.5mm) dehydrated airspace reduces noise, providing sound attenuation superior to insulating glass units with standard airspaces. 2" (50.8mm) airspace available.
5. All pivots, pinions, and racks are made of u.v. stabilized material to ensure dimensional stability, durability, never needing lubrication.
6. Various glazing products and polycarbonates are available according to applications and project needs.
7. The rack is made of corrosion-resistant aluminum.
8. The gear housing (for crank handles, knobs and motors) is mechanically attached to the frame.
9. The fingertip crank handles, thumbwheels and knobs operators are made of long-lasting plastic, zinc, brass or aluminum, easy to rotate and requiring no maintenance.

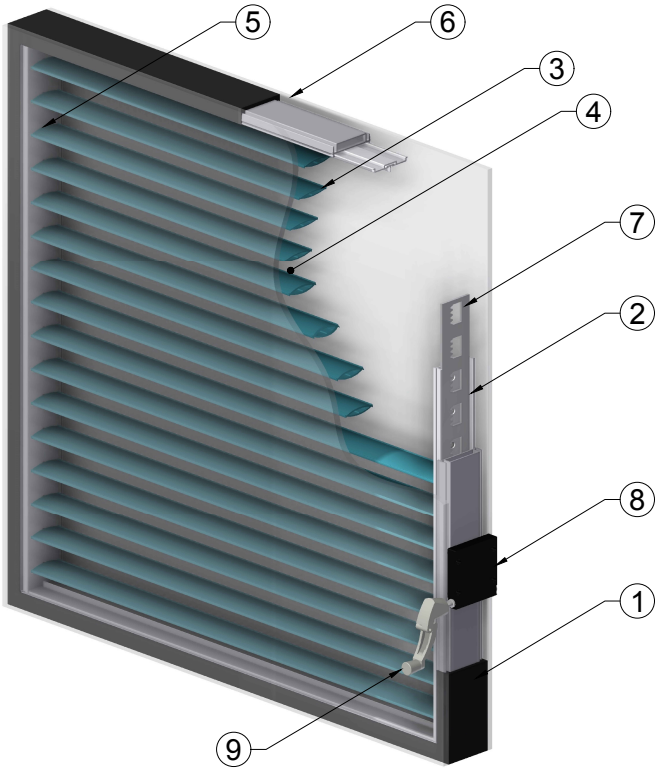

Unicel Architectural Corp.
2155 Fernand-Lafontaine
Longueuil • Québec • J4G 2J4 • Canada

VISION CONTROL®

VC 1.1

T: 800.668.1580 | 450.670.6844 • F: 866.496.2628 | 450.670.7144
E: unicel@unicelarchitectural.com • www.unicelarchitectural.com

UNICEL
ARCHITECTURAL

VISION CONTROL®
HANDLE / KNOB POSITION

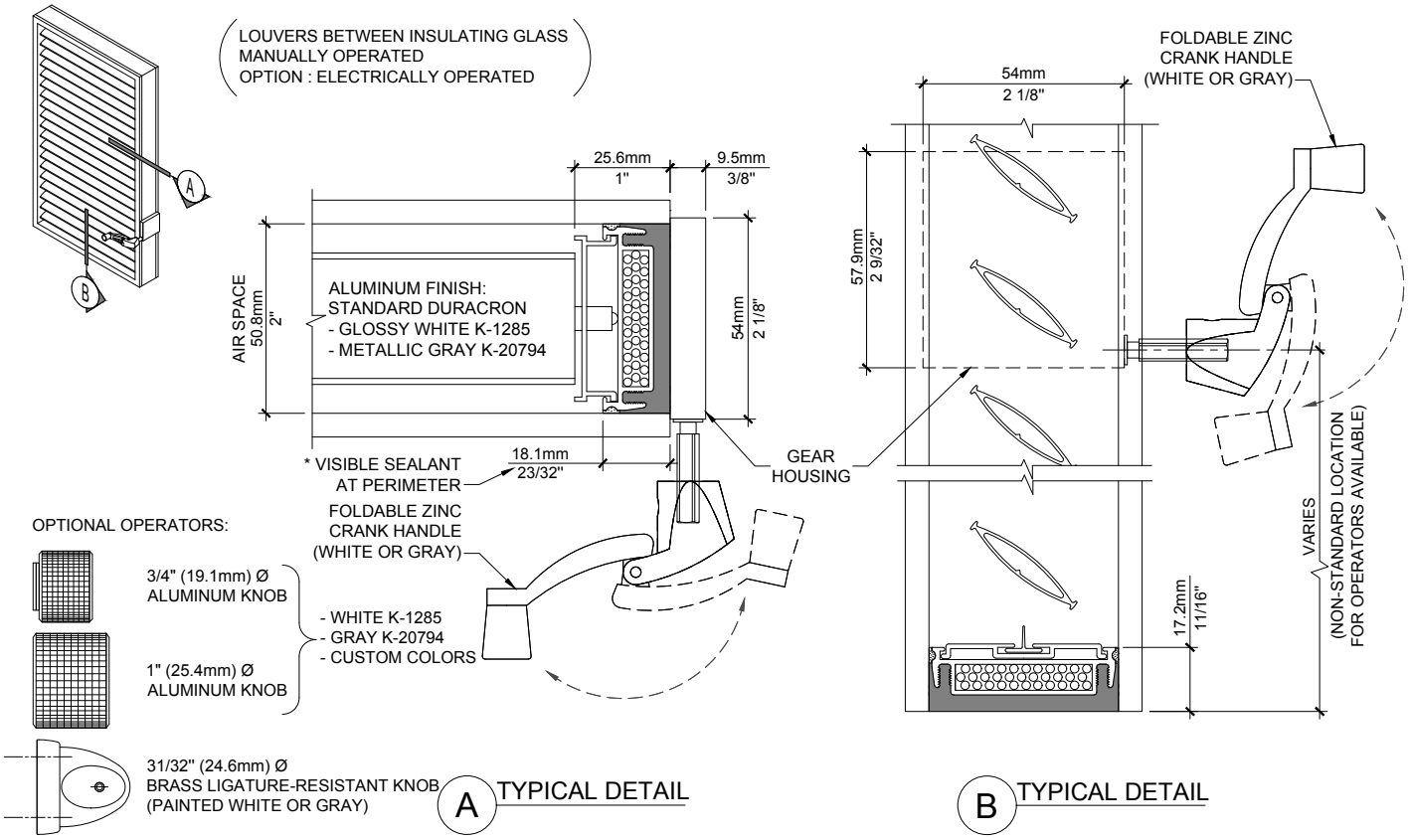

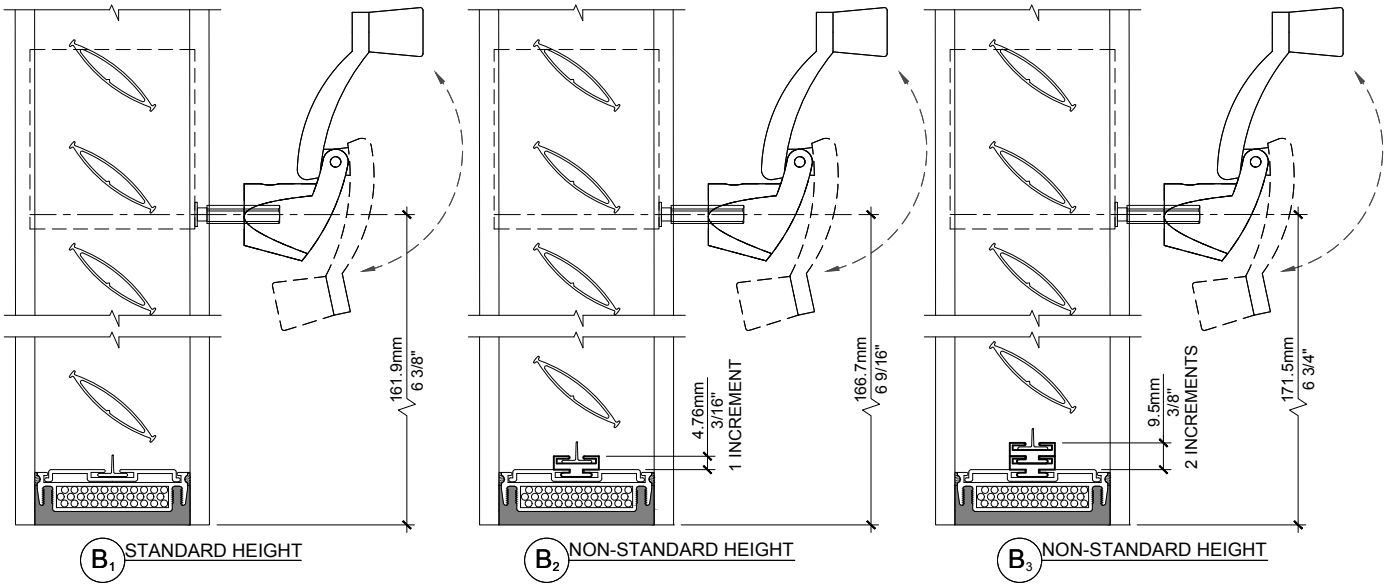

REFER TO STANDARD GLASS SIZES FOR HEIGHTS ON PAGE VC 1.6

Unicel Architectural Corp.
2155 Fernand-Lafontaine
Longueuil • Québec • J4G 2J4 • Canada

VISION CONTROL®

T: 800.668.1580 | 450.670.6844 • F: 866.496.2628 | 450.670.7144
E: unicel@unicelarchitectural.com • www.unicelarchitectural.com

UNICEL
ARCHITECTURAL

VISION CONTROL®
THUMBWHEEL POSITION

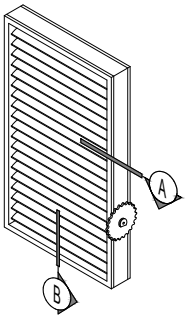

LOUVERS BETWEEN INSULATING GLASS
MANUALLY OPERATED
OPTION : ELECTRICALLY OPERATED

FULL THUMBWHEEL OPERATOR
(VARIABLE DIAMETER)
- WHITE ALUMINUM
- GRAY ALUMINUM
- BLACK POLYMER

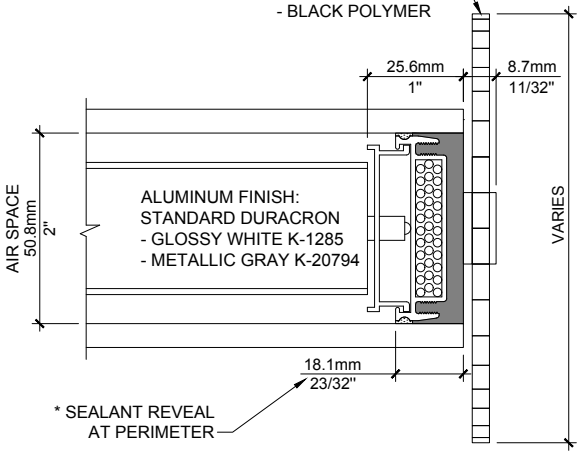

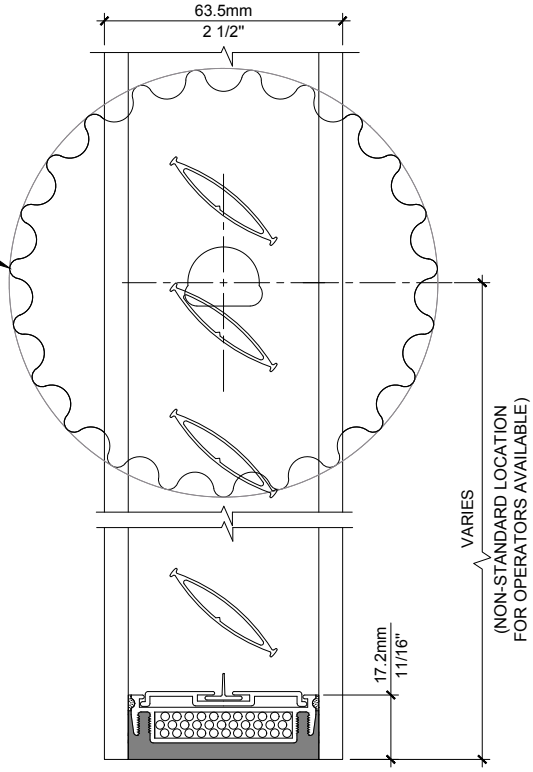

OPTIONAL OPERATORS:

FAN-SHAPED THUMBWHEEL OPERATOR
(VARIABLE DIAMETER)
- WHITE ALUMINUM
- GRAY ALUMINUM
- BLACK POLYMER

A TYPICAL DETAIL

B TYPICAL DETAIL

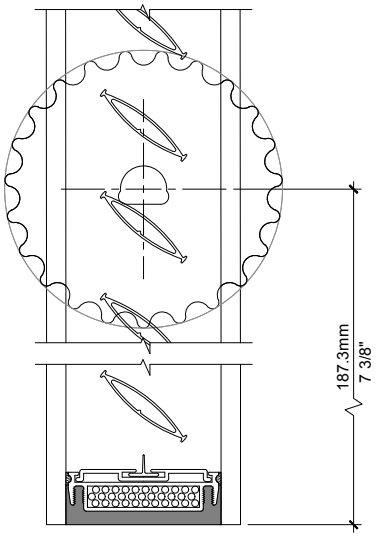

B_1 STANDARD HEIGHT

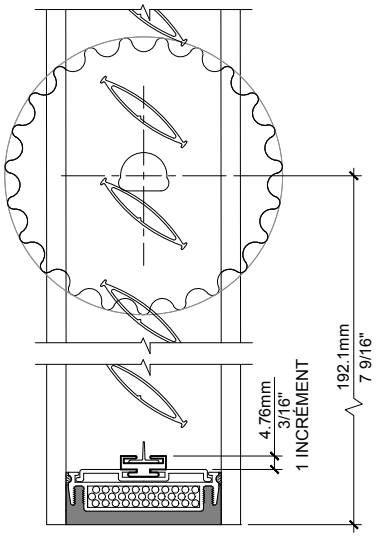

B_2 NON-STANDARD HEIGHT

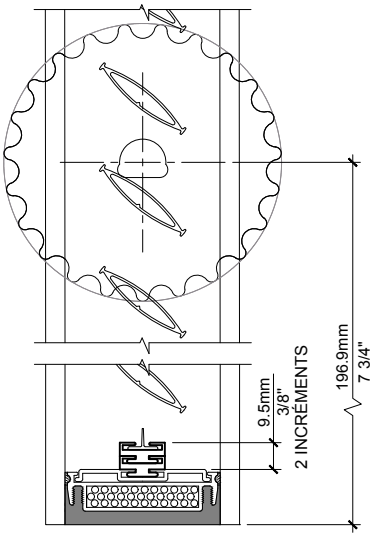

B_3 NON-STANDARD HEIGHT

REFER TO STANDARD GLASS SIZES FOR HEIGHTS ON PAGE VC 1.6

Unicel Architectural Corp.
2155 Fernand-Lafontaine
Longueuil • Québec • J4G 2J4 • Canada

VISION CONTROL®

T: 800.668.1580 | 450.670.6844 • F: 866.496.2628 | 450.670.7144
E: unicel@unicelarchitectural.com • www.unicelarchitectural.com

VISION CONTROL®
BLADE TYPES, AIRSPACES AND MINIMUM / MAXIMUM SIZES

- VISION CONTROL® GLASS PANELS ARE MADE WITH INTERLOCKING BLADES, OFFERING TOTAL PRIVACY AND OPTIMAL LIGHT CONTROL WHEN CLOSED.
- GLASS SIZE LIMITATIONS AND THICKNESSES TO BE DETERMINED BY UNICEL'S ENGINEERING DEPARTMENT.
- TWO AIRSPACE THICKNESSES ARE AVAILABLE: 2" AND 2 1/2" (50.8mm AND 63.5mm)
- THREE BLADE THICKNESSES ARE AVAILABLE: 1/4", 3/8" AND 1/2" (6.4mm, 9.5mm AND 12.7mm)

OPTIONAL SPACER:

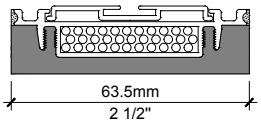

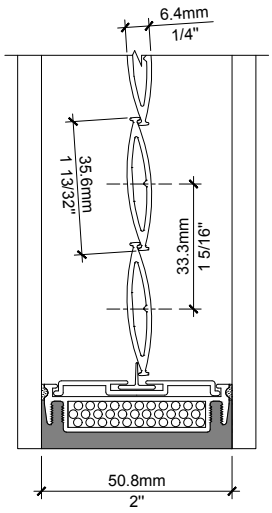

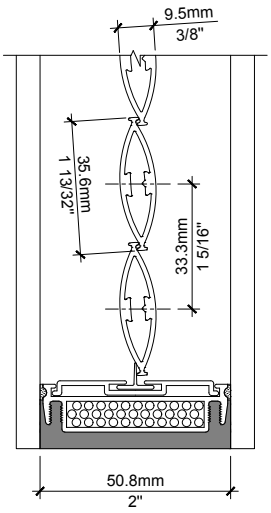

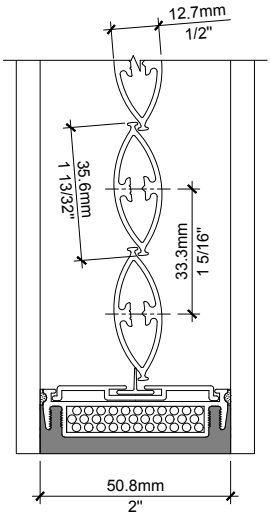

MAX. WIDTH
1219mm
48"

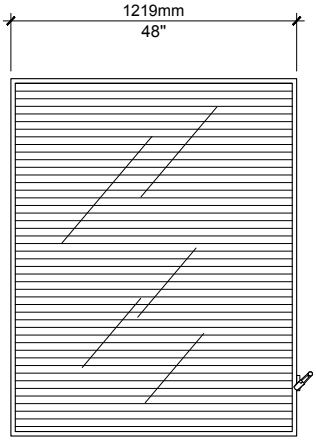

MINIMUM GLASS SIZE

MINIMUM WIDTH	3 3/4 in. = 95.3 mm

MAXIMUM GLASS SIZE

MAXIMUM AREA	MAXIMUM WIDTH
5810 in.^{2} = 3.75 m^2	48 in. = 1.219 m

MAX. WIDTH
1473mm
58"

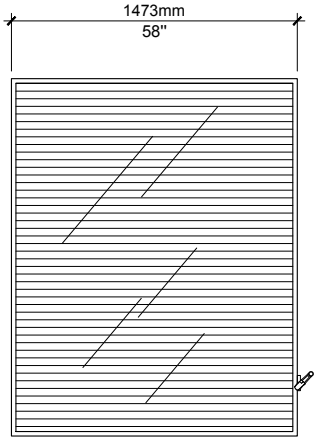

MINIMUM GLASS SIZE

MINIMUM WIDTH	3 3/4 in. = 95.3 mm

MAXIMUM GLASS SIZE

MAXIMUM AREA	MAXIMUM WIDTH
4640 in.^{2} = 2.99 m^2	58 in. = 1.473 m

MAX. WIDTH
1727mm
68"

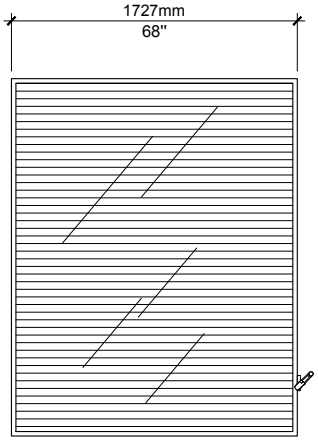

MINIMUM GLASS SIZE

MINIMUM WIDTH	3 3/4 in. = 95.3 mm

MAXIMUM GLASS SIZE

MAXIMUM AREA	MAXIMUM WIDTH
4080 in.^{2} = 2.63 m^2	68 in. = 1.727 m

* If required sizes are outside of feasibility range, please contact Unicel for special arrangements.

Unicel Architectural Corp.
2155 Fernand-Lafontaine
Longueuil • Québec • J4G 2J4 • Canada

VC 1.3

MIDDLE INNER SPACER FOR INTERMEDIATE LOUVER SUPPORT

MAXIMUM GLASS WIDTH	BLADE TYPE
96" (2438mm)	1/4" (6.4mm)
116" (2946mm)	3/8" (9.5mm)
136" (3454mm)	1/2" (12.7mm)

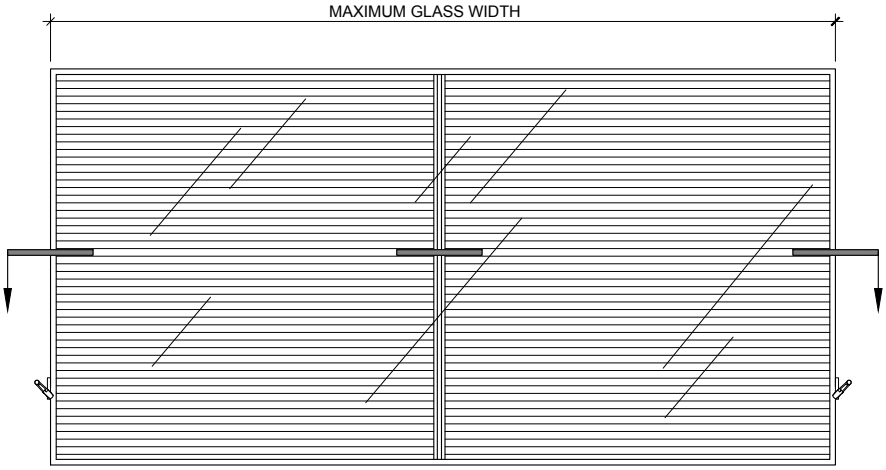

ELEVATION

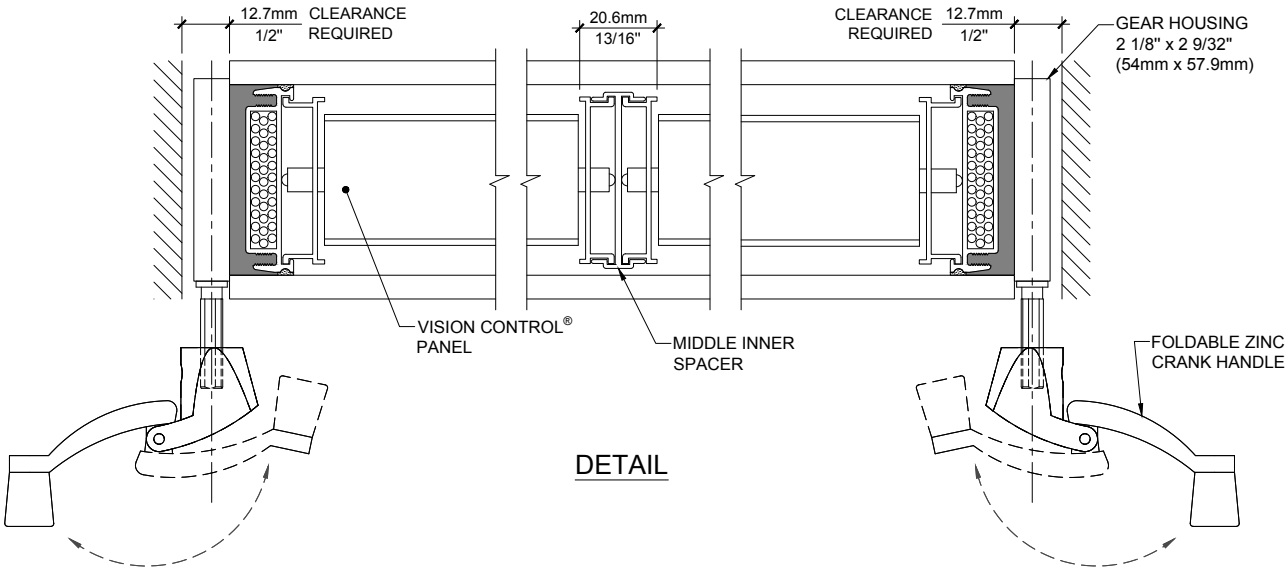

DETAIL

UNICEL
ARCHITECTURAL

VISION CONTROL®
RIGHT-ANGLED TRIANGLE AND TRAPEZOIDAL SHAPE

RIGHT-ANGLED TRIANGLE

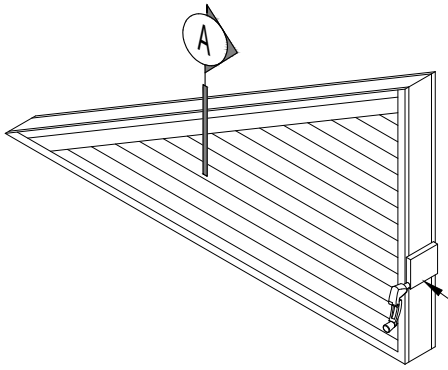

TRAPEZOIDAL

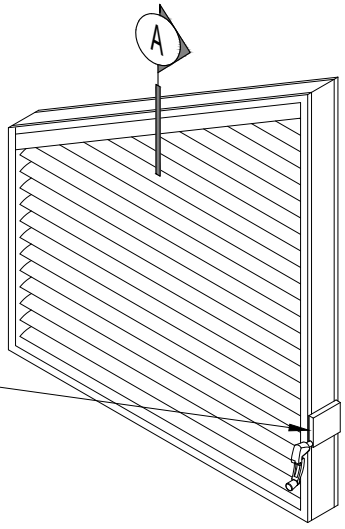

GEAR HOUSING
2 1/8" X 2 9/32"
(54mm X 57.9mm)

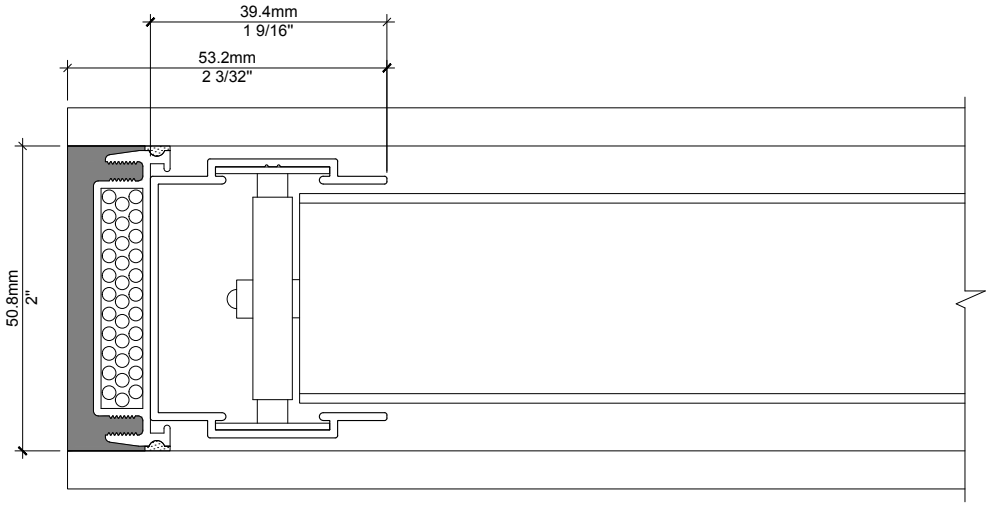

A TYPICAL DETAIL

Unicel Architectural Corp.
2155 Fernand-Lafontaine
Longueuil • Québec • J4G 2J4 • Canada

T: 800.668.1580 | 450.670.6844 • F: 866.496.2628 | 450.670.7144
E: unicel@unicelarchitectural.com • www.unicelarchitectural.com

VISION® CONTROL

UNICEL
ARCHITECTURAL

VISION CONTROL®
HEIGHT CHART

STANDARD GLASS SIZES FOR HEIGHTS*
(FOR HORIZONTAL LOUVERS ONLY)**

# BLADES	IMPERIAL (")	METRIC (mm)
3	5 5/8	142.9
4	6 15/16	176.2
5	8 1/4	209.6
6	9 9/16	242.9
7	10 7/8	276.2
8	12 3/16	309.6
9	13 1/2	342.9
10	14 13/16	376.2
11	16 1/8	409.6
12	17 7/16	442.9
13	18 3/4	476.3
14	20 1/16	509.6
15	21 3/8	542.9
16	22 11/16	576.3
17	24	609.6
18	25 5/16	642.9
19	26 5/8	676.3
20	27 15/16	709.6
21	29 1/4	743.0
22	30 9/16	776.3
23	31 7/8	809.6
24	33 3/16	843.0
25	34 1/2	876.3
26	35 13/16	909.6
27	37 1/8	943.0
28	38 7/16	976.3
29	39 3/4	1009.7
30	41 1/16	1043.0
31	42 3/8	1076.3
32	43 11/16	1109.7
33	45	1143.0
34	46 5/16	1176.3
35	47 5/8	1209.7
36	48 15/16	1243.0
37	50 1/4	1276.4
38	51 9/16	1309.7
39	52 7/8	1343.0

# BLADES	IMPERIAL (")	METRIC (mm)
40	54 3/16	1376.4
41	55 1/2	1409.7
42	56 13/16	1443.0
43	58 1/8	1476.4
44	59 7/16	1509.7
45	60 3/4	1543.1
46	62 1/16	1576.4
47	63 3/8	1609.7
48	64 11/16	1643.1
49	66	1676.4
50	67 5/16	1709.7
51	68 5/8	1743.1
52	69 15/16	1776.4
53	71 1/4	1809.8
54	72 9/16	1843.1
55	73 7/8	1876.4
56	75 3/16	1909.8
57	76 1/2	1943.1
58	77 13/16	1976.4
59	79 1/8	2009.8
60	80 7/16	2043.1
61	81 3/4	2076.5
62	83 1/16	2109.8
63	84 3/8	2143.1
64	85 11/16	2176.5
65	87	2209.8
66	88 5/16	2243.1
67	89 5/8	2276.5
68	90 15/16	2309.8
69	92 1/4	2343.2
70	93 9/16	2376.5
71	94 7/8	2409.8
72	96 3/16	2443.2
73	97 1/2	2476.5
74	98 13/16	2509.8
75	100 1/8	2543.2
76	101 7/16	2576.5

# BLADES	IMPERIAL (")	METRIC (mm)
77	102 3/4	2609.9
78	104 1/16	2643.2
79	105 3/8	2676.5
80	106 11/16	2709.9
81	108	2743.2
82	109 5/16	2776.5
83	110 5/8	2809.9
84	111 15/16	2843.2
85	113 1/4	2876.6
86	114 9/16	2909.9
87	115 7/8	2943.2
88	117 3/16	2976.6
89	118 1/2	3009.9
90	119 13/16	3043.2
91	121 1/8	3076.6
92	122 7/16	3109.9
93	123 3/4	3143.3
94	125 1/16	3176.6
95	126 3/8	3209.9
96	127 11/16	3243.3
97	129	3276.6
98	130 5/16	3309.9
99	131 5/8	3343.3
100	132 15/16	3376.6
101	134 1/4	3410.0
102	135 9/16	3443.3
103	136 7/8	3476.6
104	138 3/16	3510.0
105	139 1/2	3543.3
106	140 13/16	3576.6
107	142 1/8	3610.0
108	143 7/16	3643.3
109	144 3/4	3676.7
110	146 1/16	3710.0
111	147 3/8	3743.3
112	148 11/16	3776.7
113	150	3810.0

*NON-STANDARD GLASS HEIGHTS ARE ALSO AVAILABLE BY ADDING SERIES OF 3/16"(4.76mm) INCREMENTS TO ANY GIVEN STANDARD HEIGHT (SEE PAGE VC 1.2.1 & 1.2.2)
**FOR VERTICAL LOUVERS, THIS CHART CAN BE INTERPRETED AS STANDARD GLASS SIZES FOR WIDTHS

Unicel Architectural Corp.
2155 Fernand-Lafontaine
Longueuil • Québec • J4G 2J4 • Canada

VISION CONTROL®

T: 800.668.1580 | 450.670.6844 • F: 866.496.2628 | 450.670.7144
E: unicel@unicelarchitectural.com • www.unicelarchitectural.com

SOUND CONTROL GLASS

VISION CONTROL® IS AVAILABLE WITH VARIOUS GLASS TYPES AND THICKNESSES WITH THE OPTION OF 2" (50.8mm) OR 2 1/2" (63.5mm) AIRSPACE, OFFERING EXCEPTIONAL SOUND DAMPING CHARACTERISTICS.

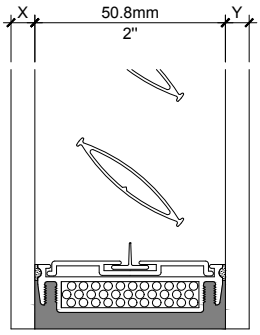

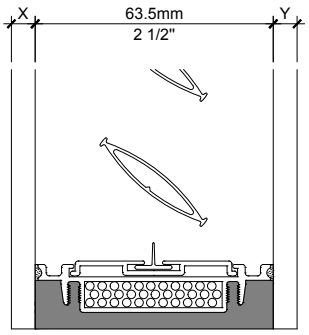

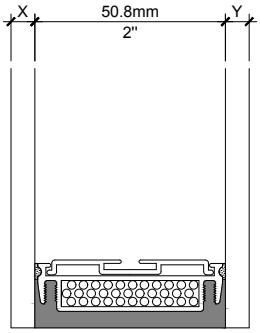

IGU AVAILABLE
WITHOUT BLADES

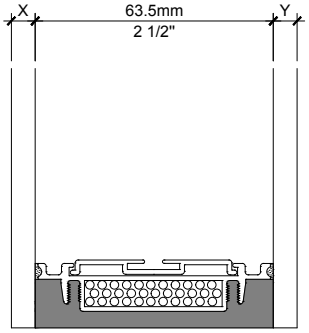

EXAMPLES OF STC RATINGS WITH VARYING GLASS CONFIGURATIONS			
GLASS LITE X	AIRSPACE	GLASS LITE Y	STC (ESTIMATED)
1/4" (6mm)	2" (50.8mm)	1/4" (6mm)	41
1/4" (6mm)	2 1/2" (63.5mm)	1/4" (6mm)	42
1/4" (6mm)	2" (50.8mm)	1/8" - .060" PVB - 1/8" (3mm - 1.6mm PVB - 3mm)	45
1/4" (6mm)	2" (50.8mm)	3/16" - .060" PVB - 3/16" (5mm - 1.6mm PVB - 5mm)	46
3/8" (10mm)	2" (50.8mm)	1/4" - .060" PVB - 1/4" (6mm - 1.6mm PVB - 6mm)	48
1/8" - .060" PVB - 1/8" (3mm - 1.6mm PVB - 3mm)	2" (50.8mm)	1/8" - .060" PVB - 1/8" (3mm - 1.6mm PVB - 3mm)	50
1/8" - .060" PVB - 1/8" (3mm - 1.6mm PVB - 3mm)	2 1/2" (63.5mm)	1/8" - .060" PVB - 1/8" (3mm - 1.6mm PVB - 3mm)	51

NOTE:
ALL DATA WERE ESTIMATED (DERIVED FROM TESTED SAMPLES COMPARABLE IN CONFIGURATION TO THOSE ABOVE) AND ARE NOT GUARANTEED FOR ALL SAMPLES OR APPLICATIONS.
ALL DATA SHOULD BE VERIFIED VIA TESTING THE ACTUAL WINDOW ASSEMBLY TO ASCERTAIN THE EFFECTS OF WINDOW FRAMES ON TOTAL WINDOW SYSTEM SOUND TRANSMISSION LOSS.

Unicel Architectural Corp.
2155 Fernand-Lafontaine
Longueuil • Québec • J4G 2J4 • Canada

VISION CONTROL®

T: 800.668.1580 | 450.670.6844 • F: 866.496.2628 | 450.670.7144
E: unicel@unicelarchitectural.com • www.unicelarchitectural.com

EXTENSION POLE

FOR OUT-OF-REACH VISION CONTROL® UNITS

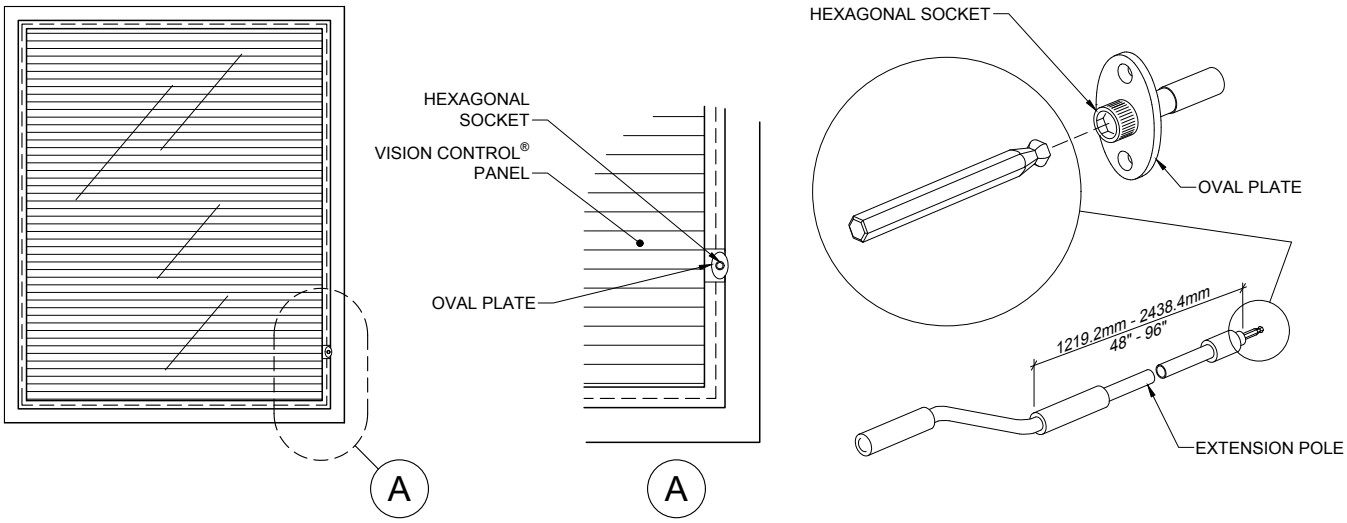

GLASS STOPS

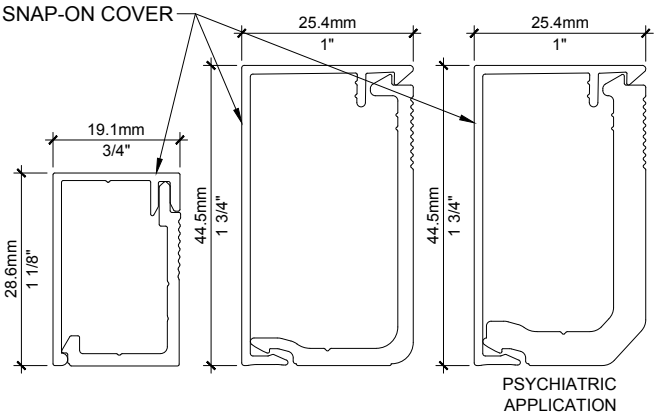

STANDARD FINISHES*	GLASS STOPS
DURACRON WHITE K-1285	✓
DURACRON GRAY K-20794	✓
CLEAR ANODIZED (CLASS II)	✓

* OTHER FINISHES AVAILABLE UPON REQUEST.

THUMBWHEEL COVER

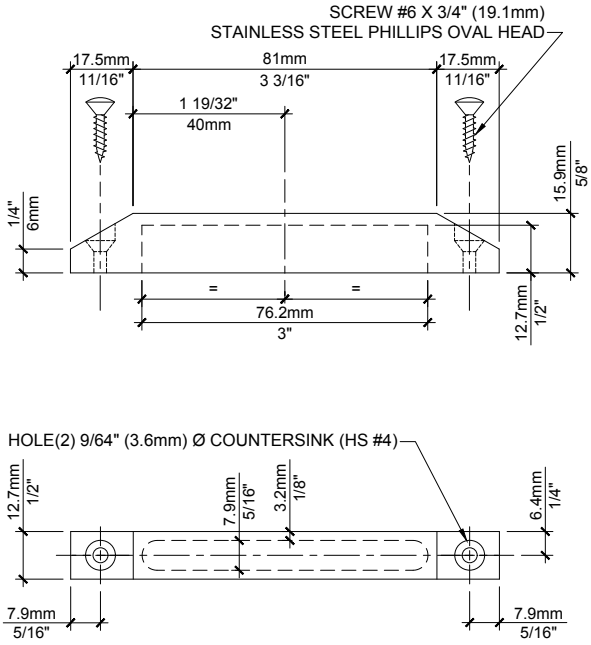

Unicel Architectural Corp.
2155 Fernand-Lafontaine
Longueuil • Québec • J4G 2J4 • Canada

VC 1.8

UNICEL
ARCHITECTURAL

VISION CONTROL®
INTERIOR WALL
HOLLOW METAL FRAME

CRANK HANDLE OPERABLE ON ONE OR BOTH SIDE(S)

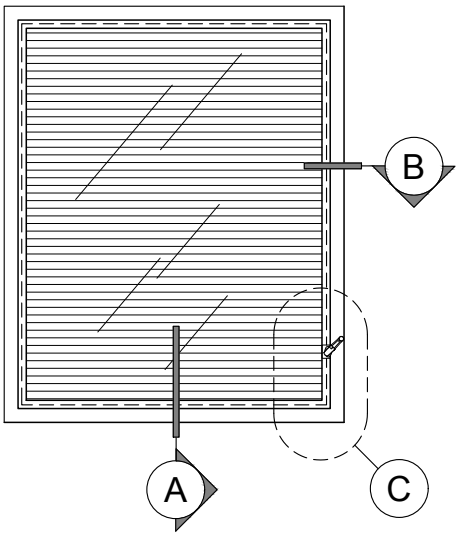

STANDARD FINISHES*	LOUVERS	GLASS STOPS
DURACRON WHITE K-1285	✓	✓
DURACRON GRAY K-20794	✓	✓
CLEAR ANODIZED (CLASS II)		✓

* OTHER FINISHES AVAILABLE UPON REQUEST.

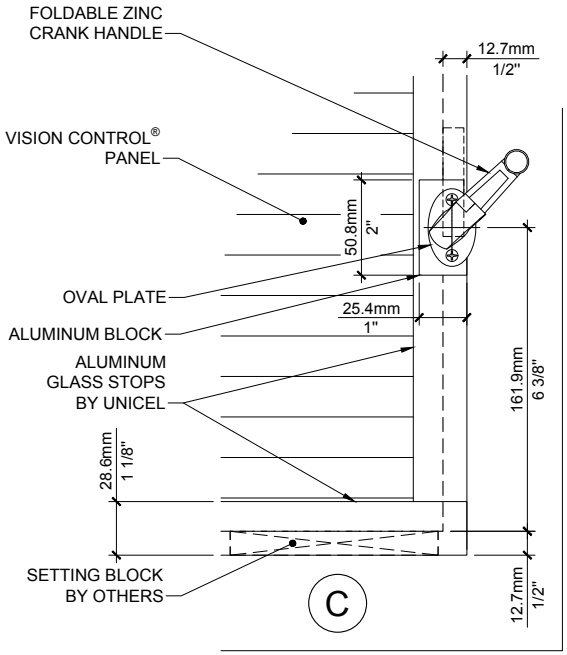

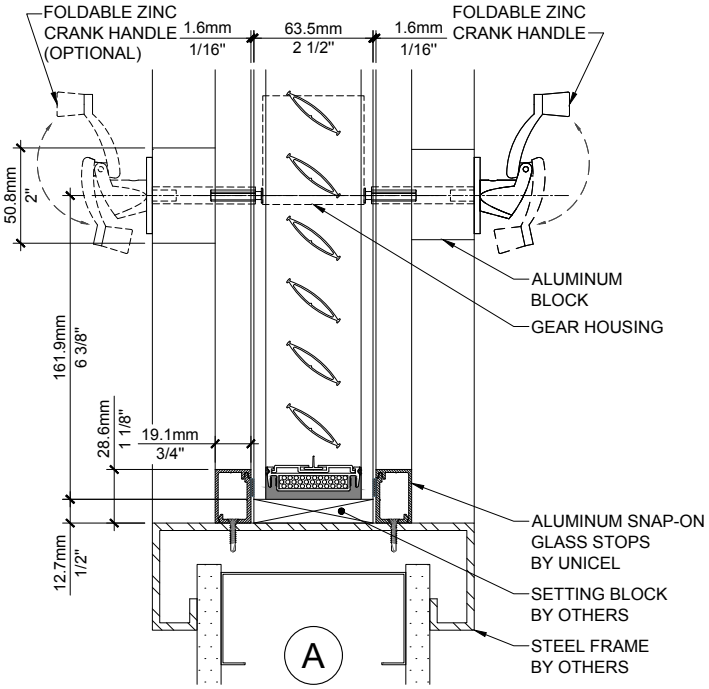

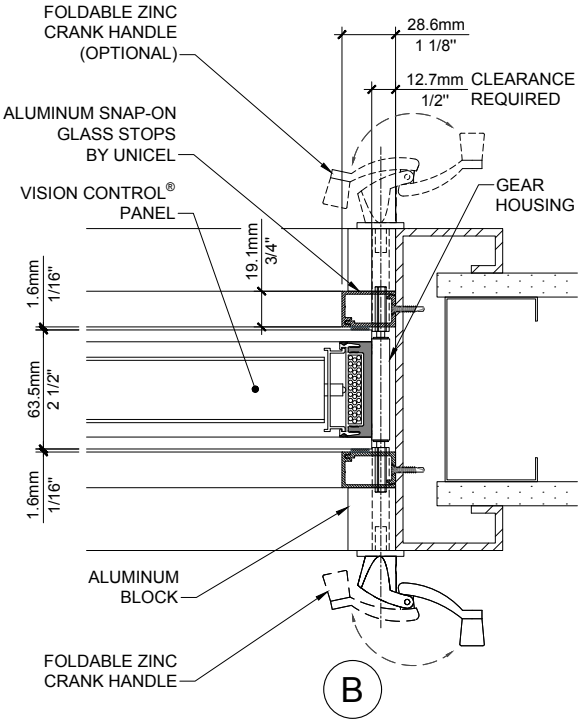

Unicel Architectural Corp.
2155 Fernand-Lafontaine
Longueuil • Québec • J4G 2J4 • Canada

VISION CONTROL®

VC 2.1.1

T: 800.668.1580 | 450.670.6844 • F: 866.496.2628 | 450.670.7144
E: unicel@unicelarchitectural.com • www.unicelarchitectural.com

UNICEL
ARCHITECTURAL

VISION CONTROL®
INTERIOR WALL
HOLLOW METAL FRAME

THUMBWHEEL OPERABLE ON ONE OR BOTH SIDE(S)

ACCESSIBLE ON BOTH SIDES

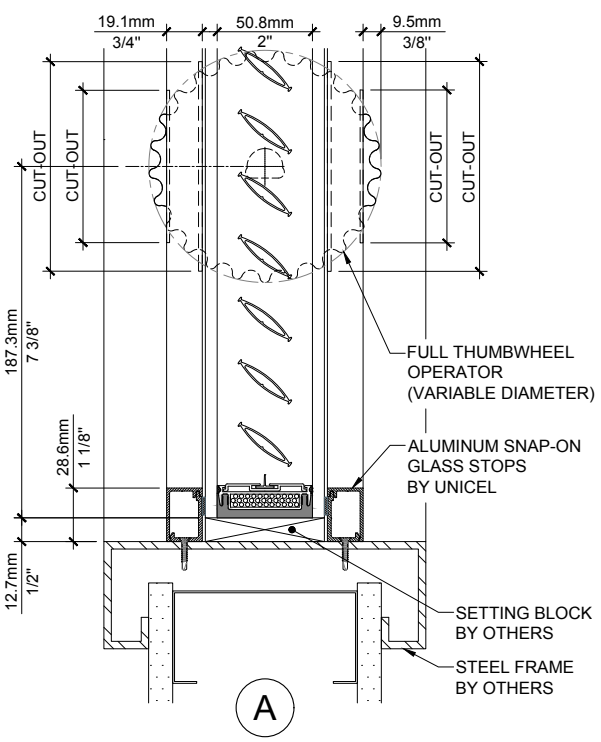

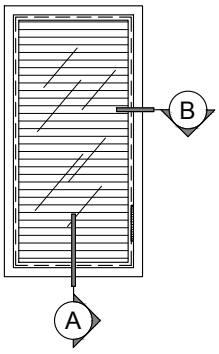

ACCESSIBLE ON ONE SIDE

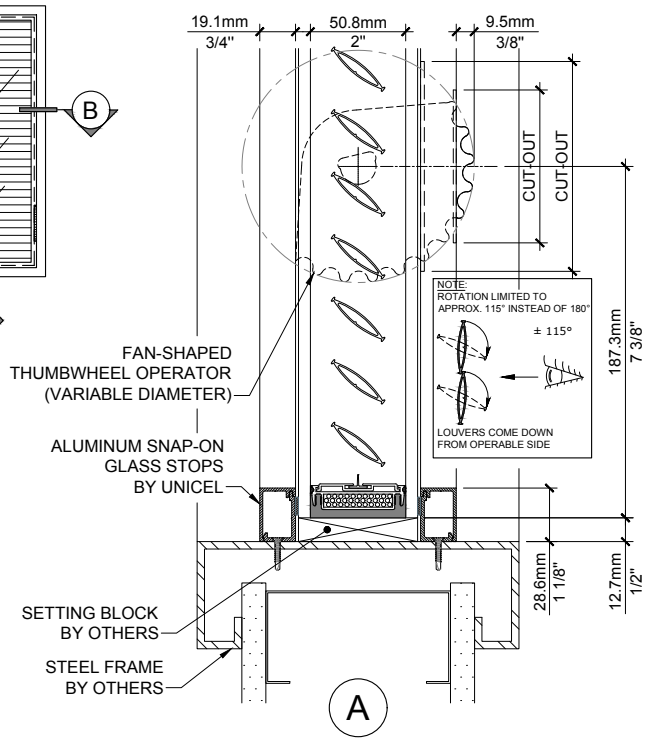

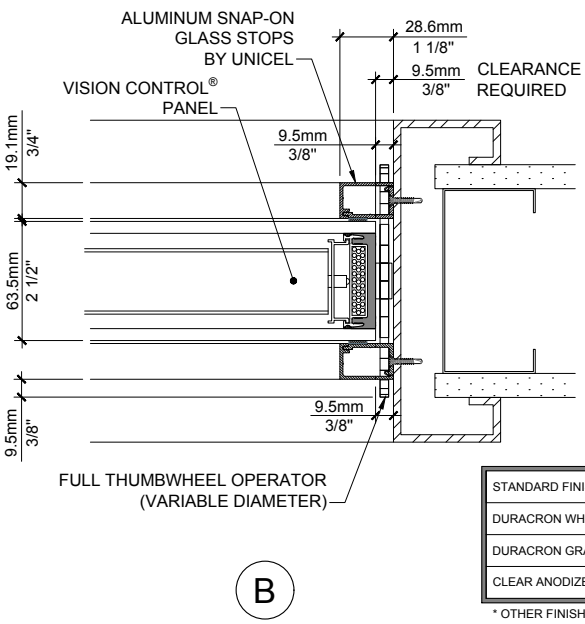

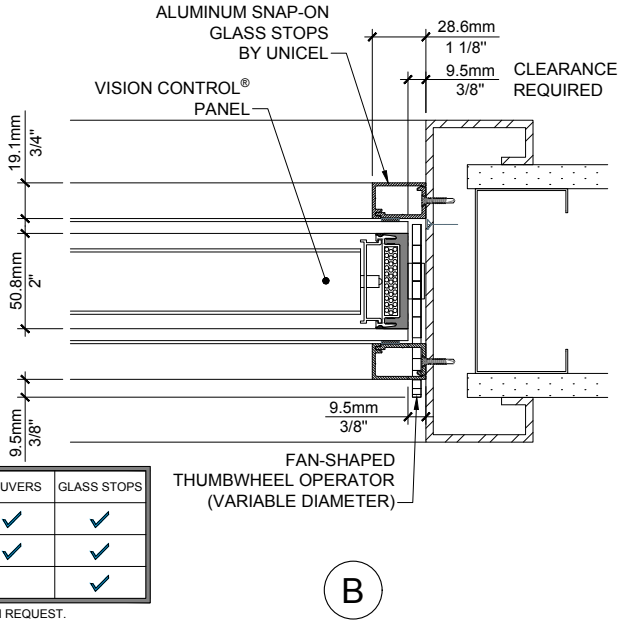

STANDARD FINISHES*	LOUVERS	GLASS STOPS
DURACRON WHITE K-1285	✓	✓
DURACRON GRAY K-20794	✓	✓
CLEAR ANODIZED (CLASS II)		✓

* OTHER FINISHES AVAILABLE UPON REQUEST.

Unicel Architectural Corp.
2155 Fernand-Lafontaine
Longueuil • Québec • J4G 2J4 • Canada

VISION CONTROL®

VC 2.1.2

T: 800.668.1580 | 450.670.6844 • F: 866.496.2628 | 450.670.7144
E: unicel@unicelarchitectural.com • www.unicelarchitectural.com

UNICEL
ARCHITECTURAL

VISION CONTROL®
INTERIOR WALL
HOLLOW METAL FRAMES

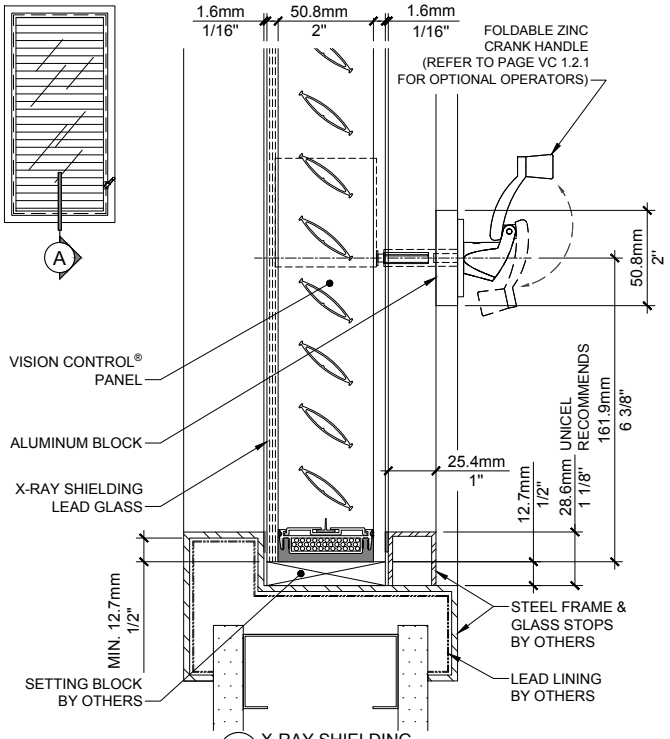

A X-RAY SHIELDING DETAIL - INTERIOR

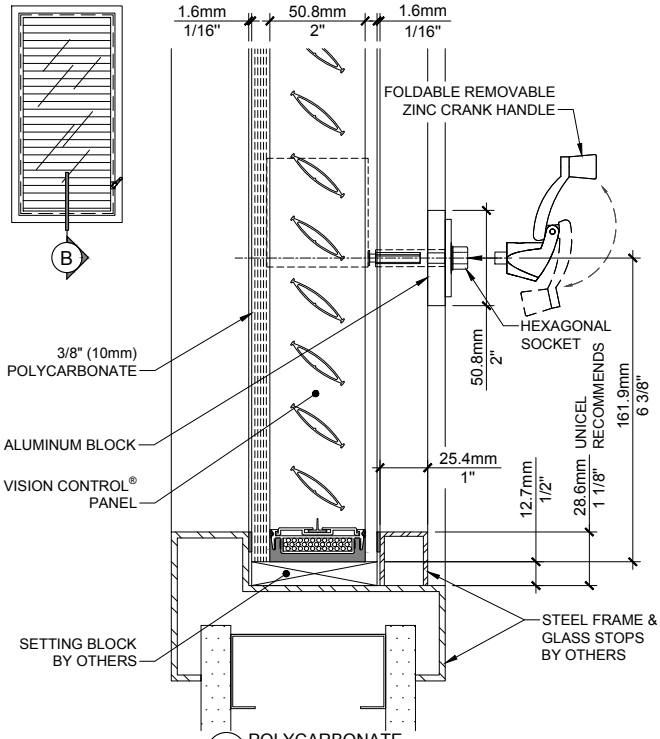

B POLYCARBONATE DETAIL - INTERIOR

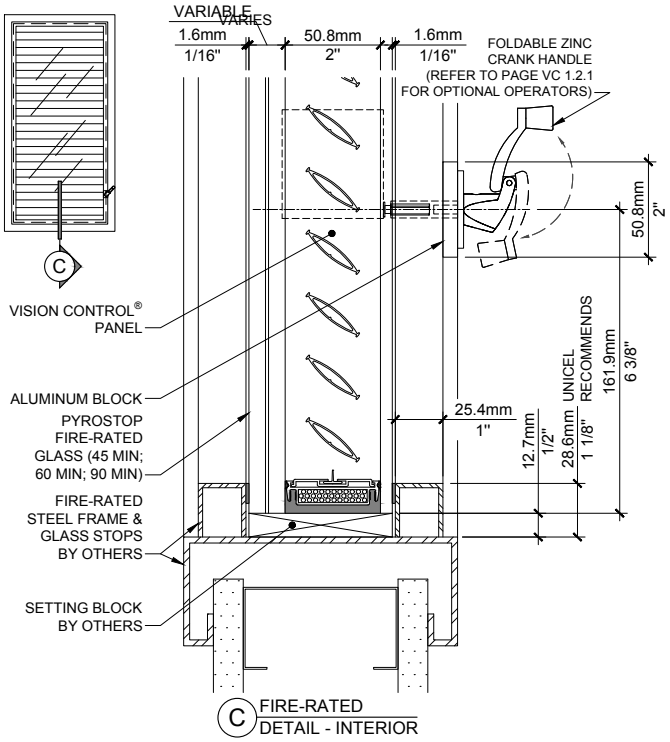

C FIRE-RATED DETAIL - INTERIOR

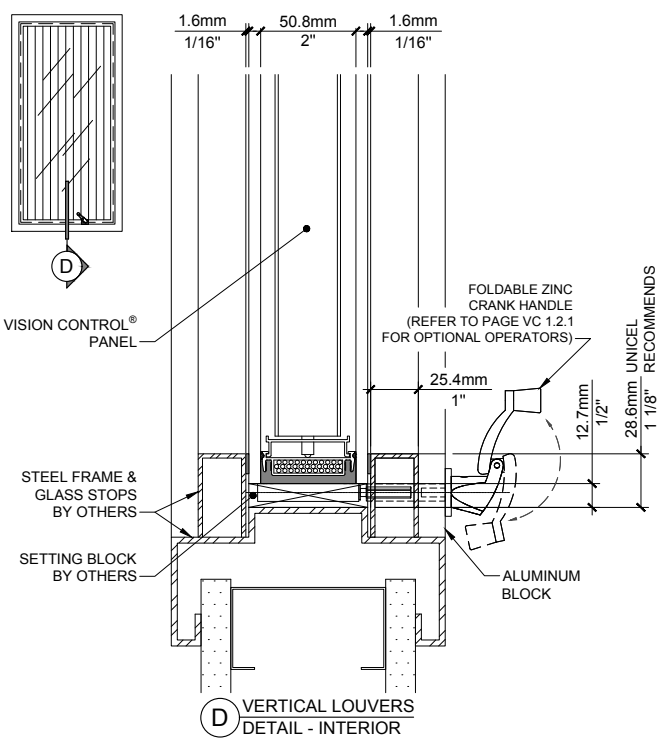

D VERTICAL LOUVERS DETAIL - INTERIOR

Unicel Architectural Corp.
2155 Fernand-Lafontaine
Longueuil • Québec • J4G 2J4 • Canada

VISION® CONTROL

VC 2.1.3

T: 800.668.1580 | 450.670.6844 • F: 866.496.2628 | 450.670.7144
E: unicel@unicelarchitectural.com • www.unicelarchitectural.com

UNICEL
ARCHITECTURAL

VISION CONTROL®
INTERIOR WALL
VARIOUS FRAMES

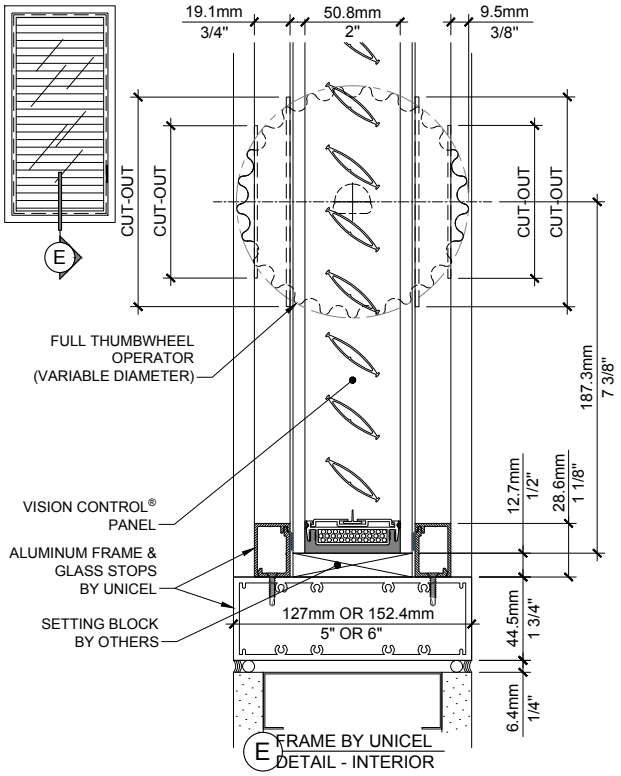

E FRAME BY UNICEL DETAIL - INTERIOR

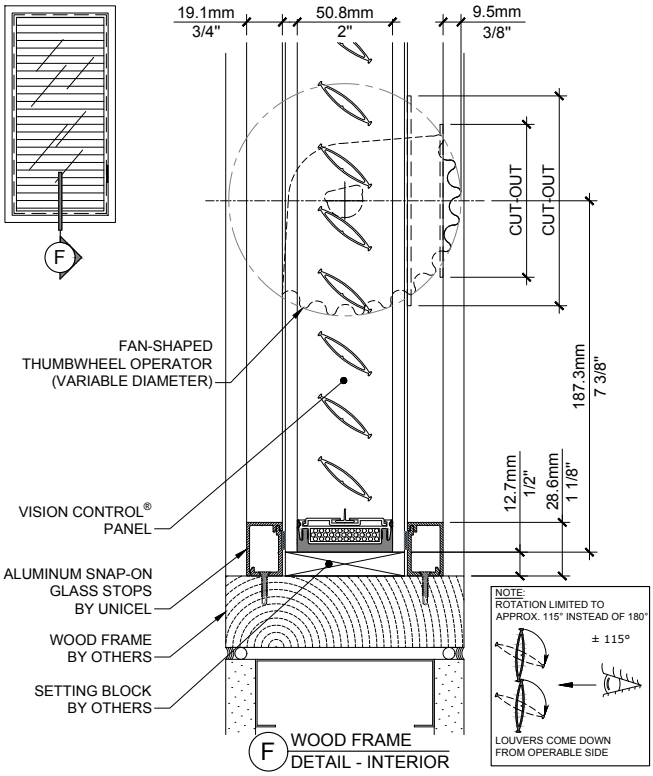

F WOOD FRAME DETAIL - INTERIOR

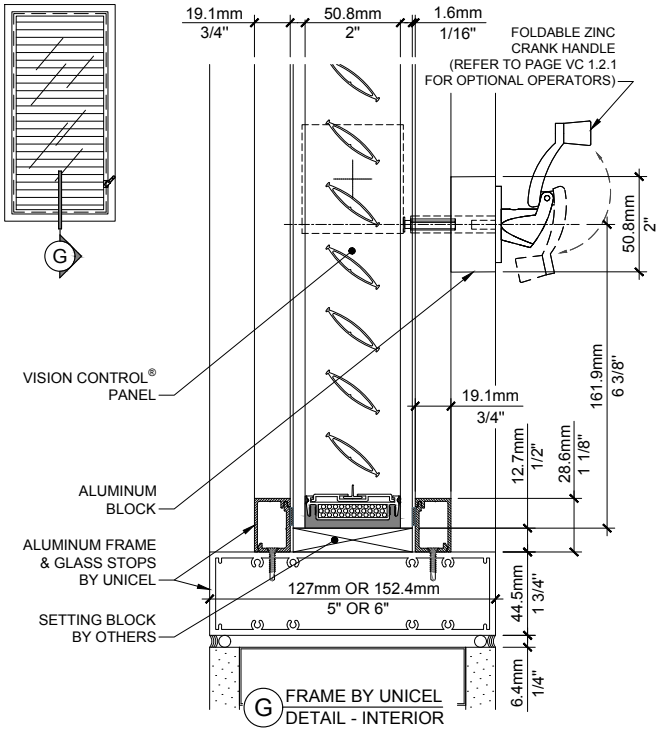

G FRAME BY UNICEL DETAIL - INTERIOR

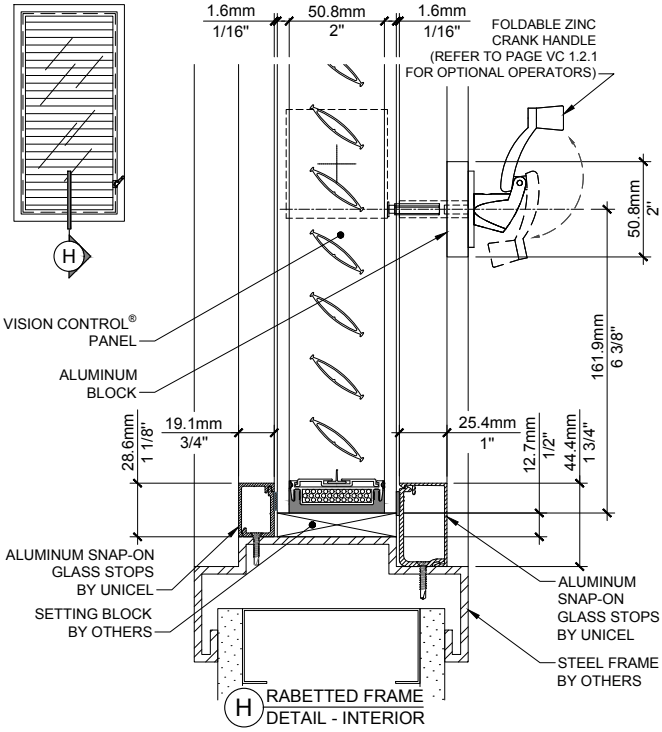

H RABETTED FRAME DETAIL - INTERIOR

Unicel Architectural Corp.
2155 Fernand-Lafontaine
Longueuil • Québec • J4G 2J4 • Canada

VISION CONTROL®

VC 2.1.4

T: 800.668.1580 | 450.670.6844 • F: 866.496.2628 | 450.670.7144
E: unicel@unicelarchitectural.com • www.unicelarchitectural.com

UNICEL
ARCHITECTURAL

VISION CONTROL®
INTERIOR WALL
SOUND OR SMOKE BARRIER

DOUBLE FAN-SHAPED THUMBWHEEL OPERABLE ON BOTH SIDES

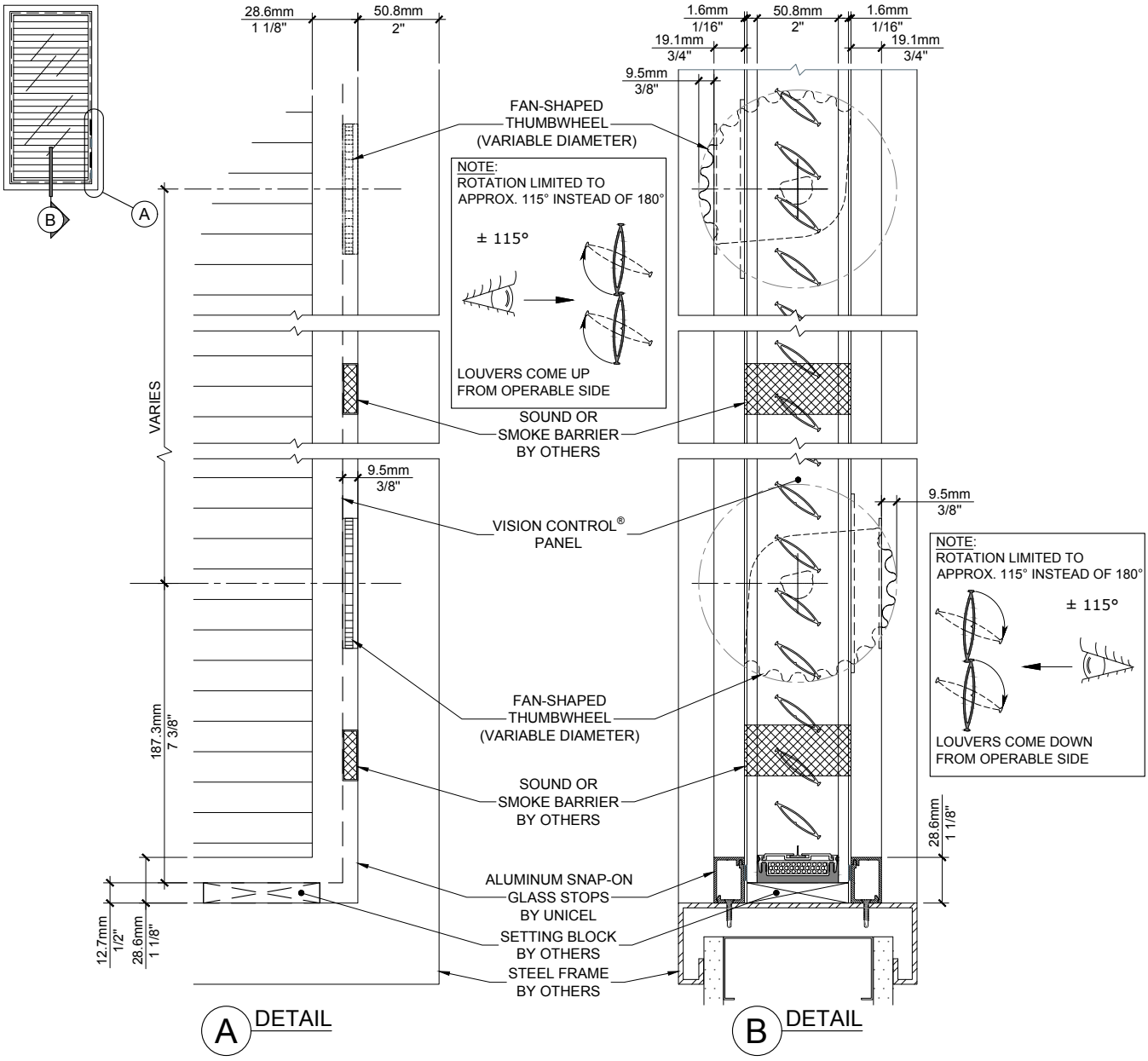

STANDARD FINISHES*	LOUVERS	GLASS STOPS
DURACRON WHITE K-1285	✓	✓
DURACRON GRAY K-20794	✓	✓
CLEAR ANODIZED (CLASS II)		✓

* OTHER FINISHES AVAILABLE UPON REQUEST.

Unicel Architectural Corp.
2155 Fernand-Lafontaine
Longueuil • Québec • J4G 2J4 • Canada

VISION CONTROL®

VC 2.1.5

T: 800.668.1580 | 450.670.6844 • F: 866.496.2628 | 450.670.7144
E: unicel@unicelarchitectural.com • www.unicelarchitectural.com

UNICEL
ARCHITECTURAL

VISION CONTROL®
INTERIOR WALL
CORNER CONFIGURATIONS

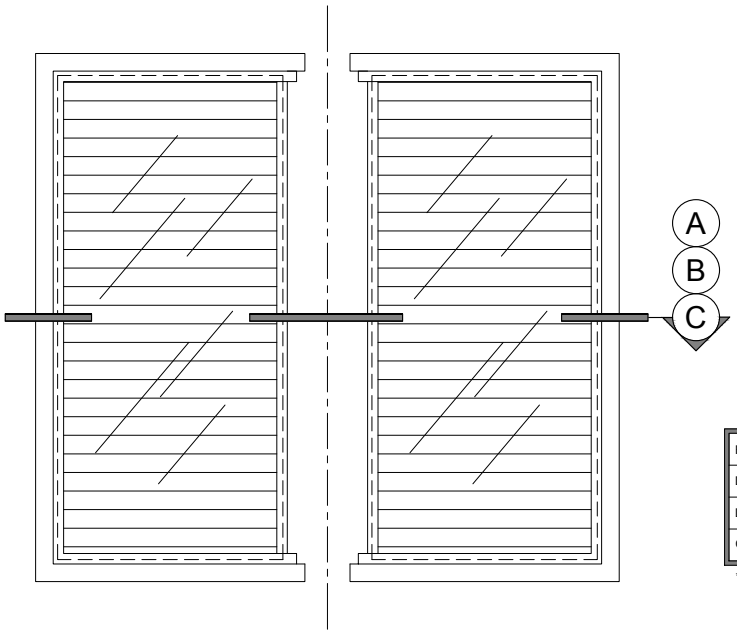

FINITIONS STANDARD*	LOUVERS	GLASS STOPS	BREAK METAL
DURACRON WHITE K-1285	✓	✓	✓
DURACRON GRAY K-20794	✓	✓	✓
CLEAR ANODIZED (CLASS II)		✓	✓

* OTHER FINISHES AVAILABLE UPON REQUEST.

90° ANGLE

BUTT-GLAZED WITH CORNER BRAKE METAL

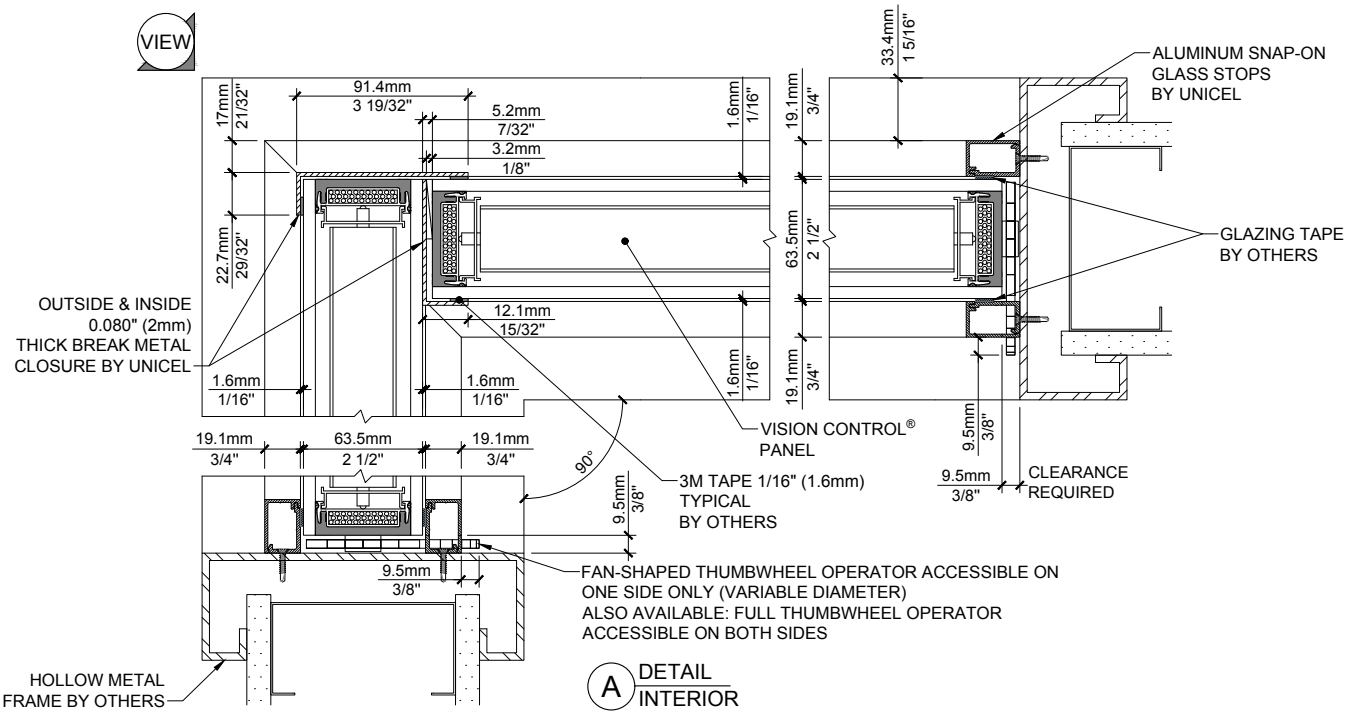

Unicel Architectural Corp.
2155 Fernand-Lafontaine
Longueuil • Québec • J4G 2J4 • Canada

VISION CONTROL®

VC 2.1.6

T: 800.668.1580 | 450.670.6844 • F: 866.496.2628 | 450.670.7144
E: unicel@unicelarchitectural.com • www.unicelarchitectural.com

UNICEL
ARCHITECTURAL

VISION CONTROL®
INTERIOR WALL
CORNER CONFIGURATIONS

BUTT-GLAZED WITHOUT CORNER BRAKE METAL

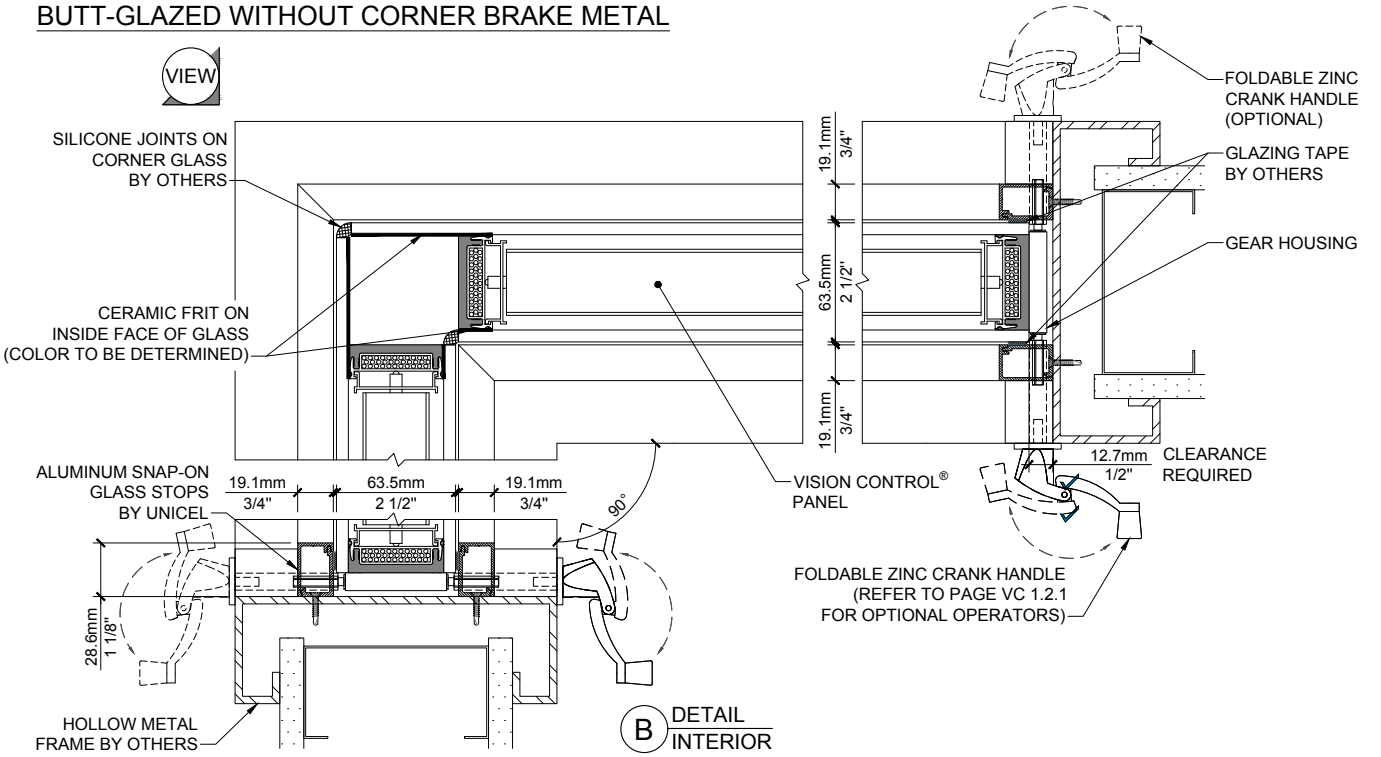

BUTT-GLAZED WITH CORNER BRAKE METAL

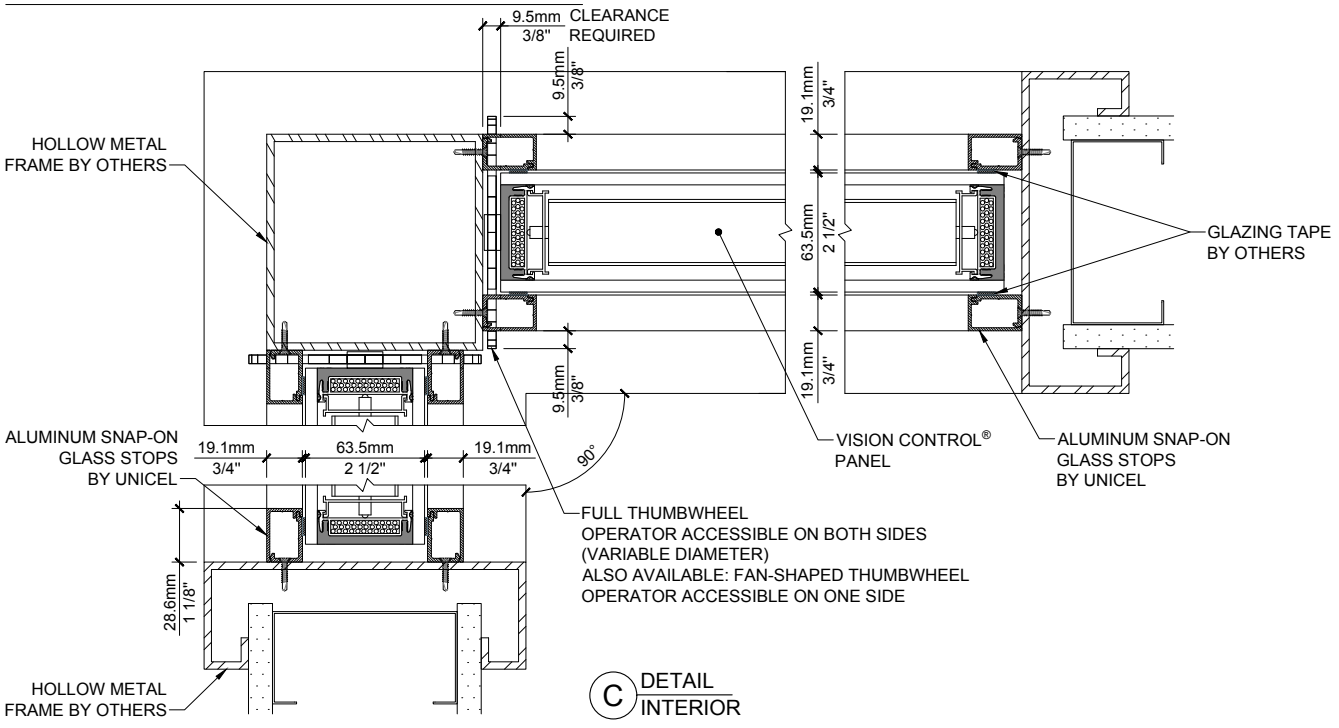

Unicel Architectural Corp.
2155 Fernand-Lafontaine
Longueuil • Québec • J4G 2J4 • Canada

VISION CONTROL®

VC 2.1.7

T: 800.668.1580 | 450.670.6844 • F: 866.496.2628 | 450.670.7144
E: unicel@unicelarchitectural.com • www.unicelarchitectural.com

UNICEL
ARCHITECTURAL

VISION CONTROL®
INTERIOR WALL
CORNER CONFIGURATIONS

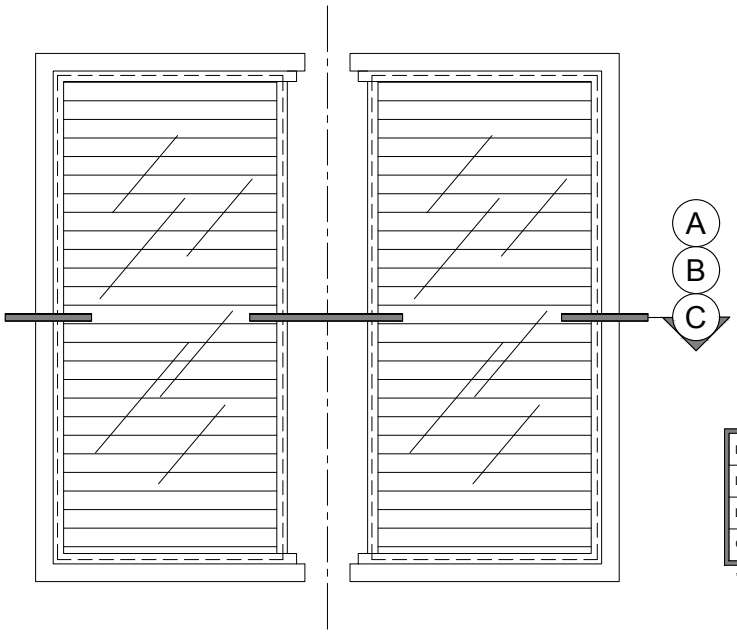

FINITIONS STANDARD*	LOUVERS	GLASS STOPS	BREAK METAL
DURACRON WHITE K-1285	✓	✓	✓
DURACRON GRAY K-20794	✓	✓	✓
CLEAR ANODIZED (CLASS II)		✓	✓

* OTHER FINISHES AVAILABLE UPON REQUEST.

VARIABLE ANGLE

BUTT-GLAZED WITH CORNER BRAKE METAL

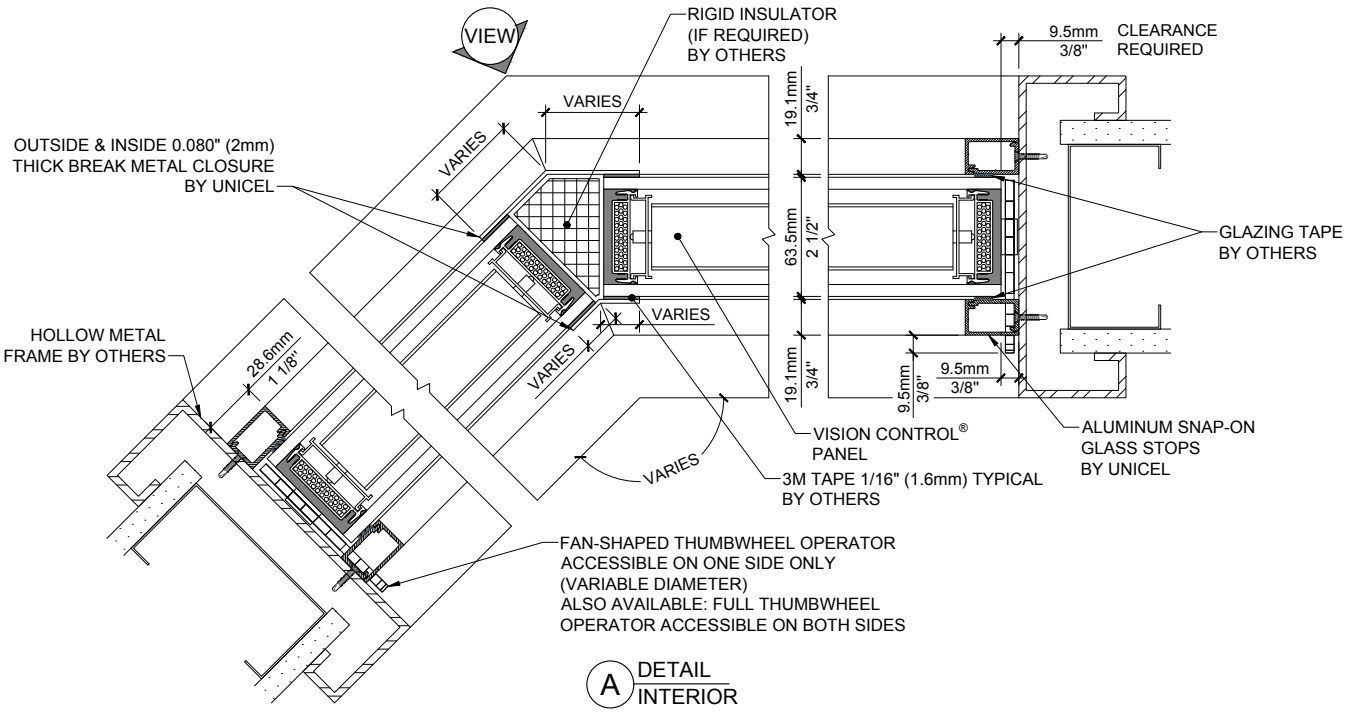

Unicel Architectural Corp.
2155 Fernand-Lafontaine
Longueuil • Québec • J4G 2J4 • Canada

VISION® CONTROL

VC 2.1.8

T: 800.668.1580 | 450.670.6844 • F: 866.496.2628 | 450.670.7144
E: unicel@unicelarchitectural.com • www.unicelarchitectural.com

VISION CONTROL® INTERIOR WALL CORNER CONFIGURATIONS

BUTT-GLAZED WITHOUT CORNER BRAKE METAL

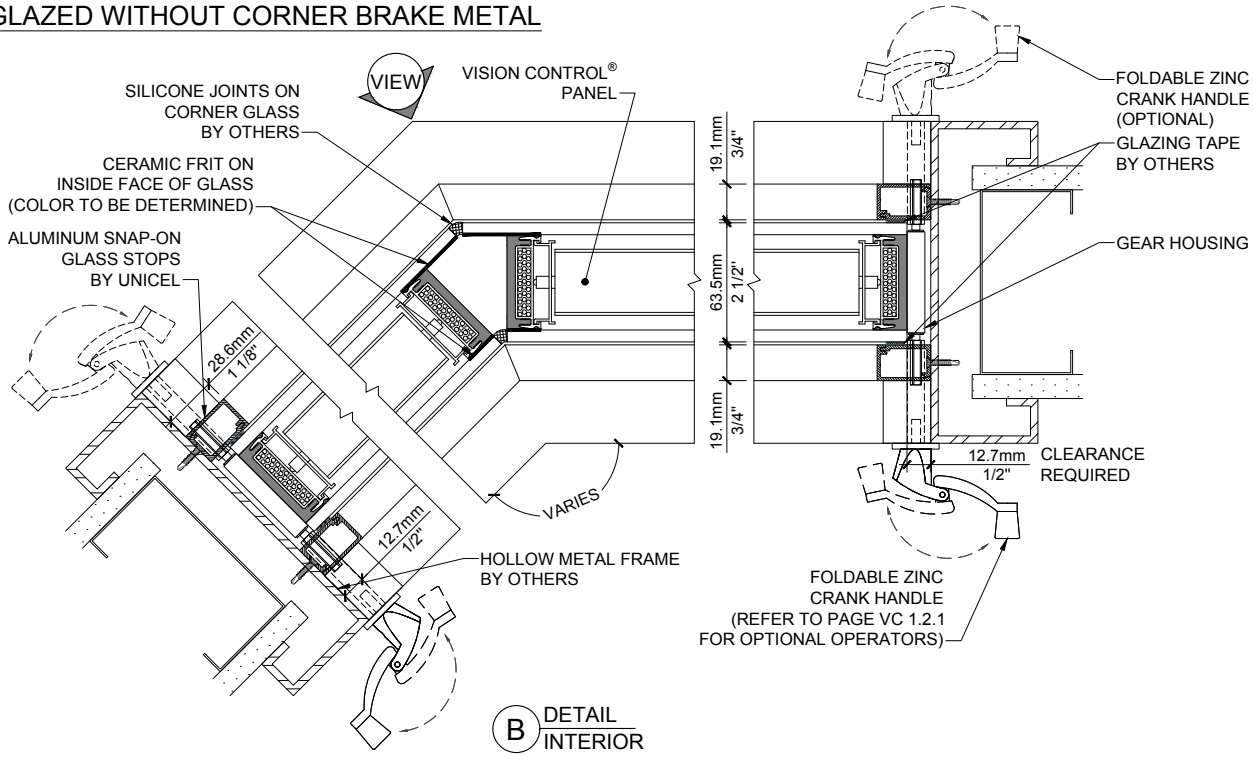

CORNER POST

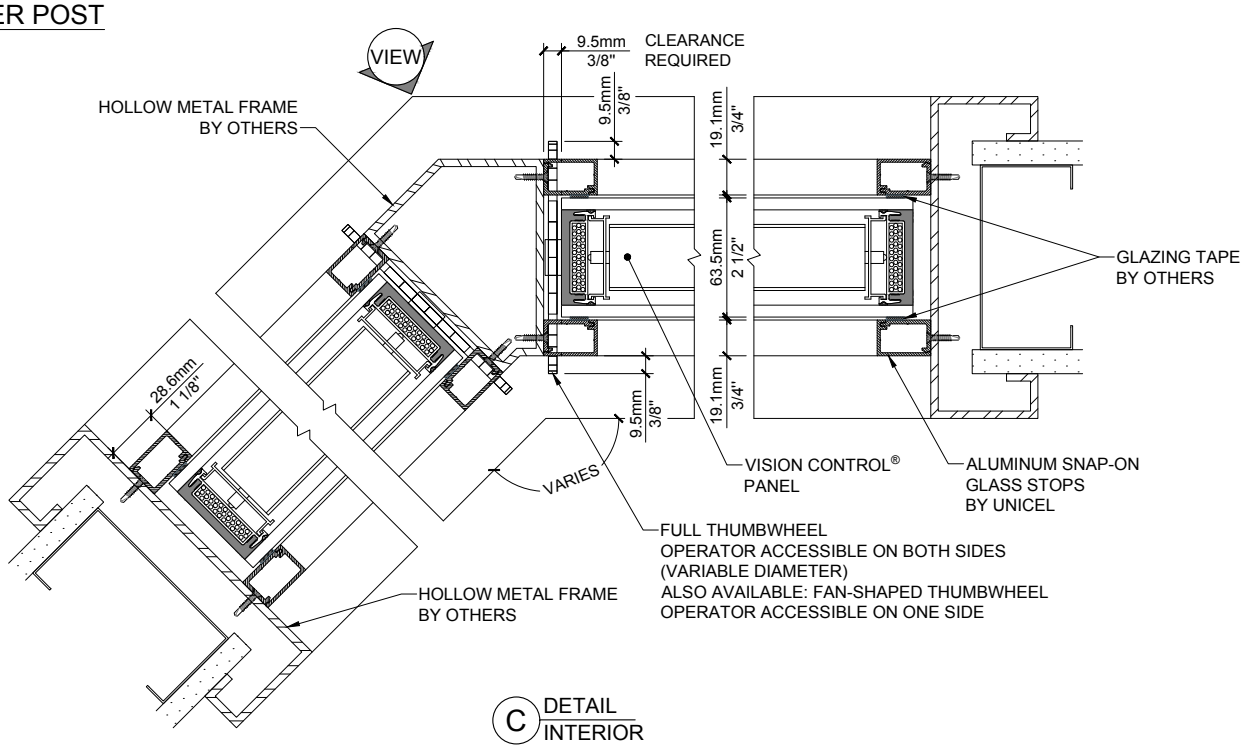

Unicel Architectural Corp.
2155 Fernand-Lafontaine
Longueuil • Québec • J4G 2J4 • Canada

T: 800.668.1580 | 450.670.6844 • F: 866.496.2628 | 450.670.7144
E: unicel@unicelarchitectural.com • www.unicelarchitectural.com

UNICEL
ARCHITECTURAL

VISION CONTROL®
EXTERIOR WALL
VARIOUS FRAMES

STOREFRONT SYSTEM

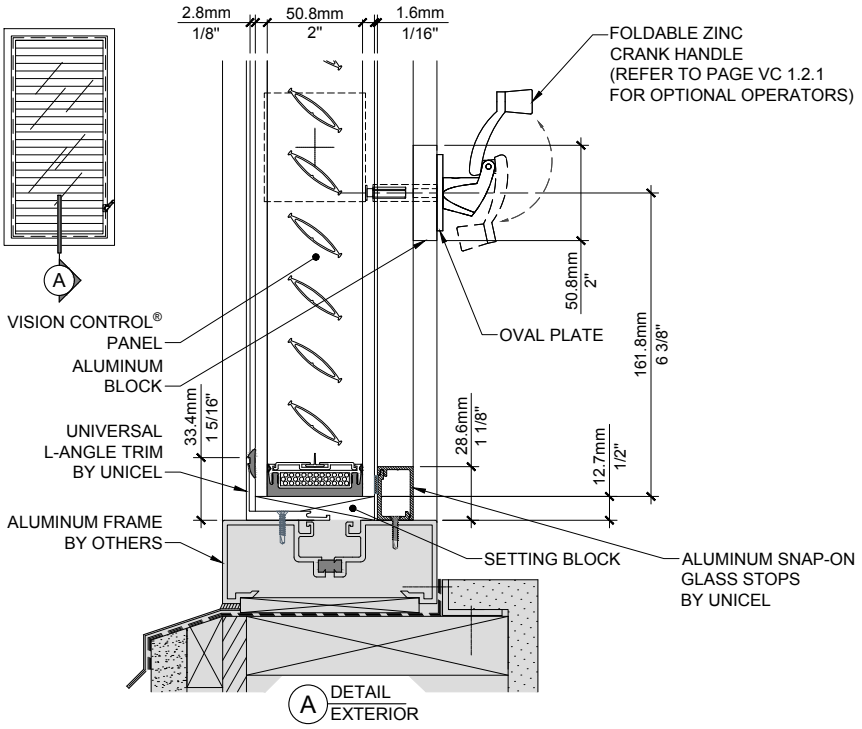

OPERABLE WINDOW

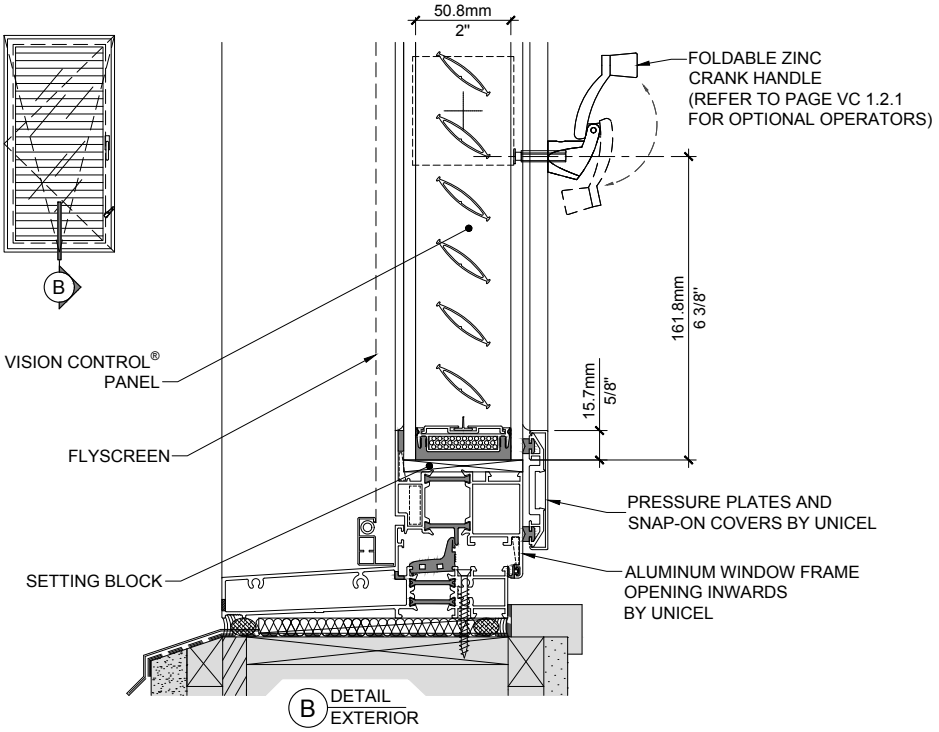

Unicel Architectural Corp.
2155 Fernand-Lafontaine
Longueuil • Québec • J4G 2J4 • Canada

VISION® CONTROL

T: 800.668.1580 | 450.670.6844 • F: 866.496.2628 | 450.670.7144
E: unicel@unicelarchitectural.com • www.unicelarchitectural.com

UNICEL
ARCHITECTURAL

VISION CONTROL®
EXTERIOR WALL
VARIOUS FRAMES

EXISTING CURTAIN WALL SYSTEM

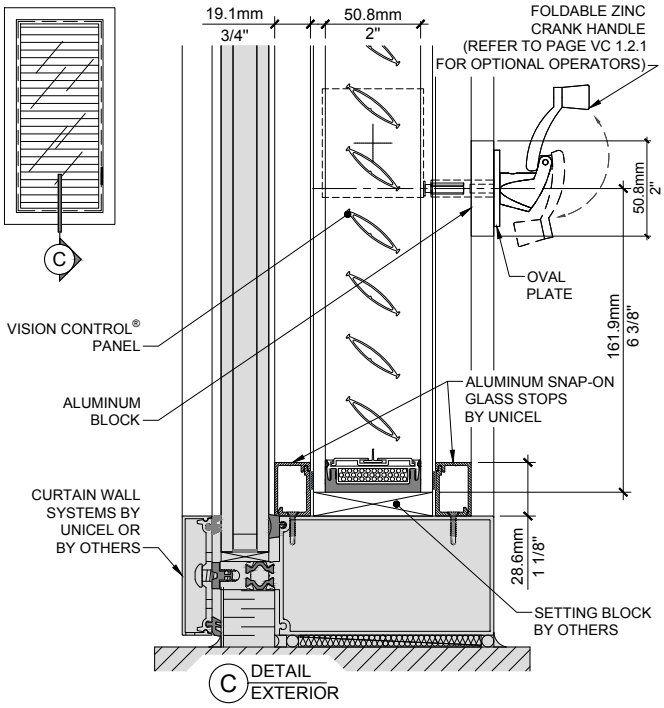

CURTAIN WALL ADAPTER

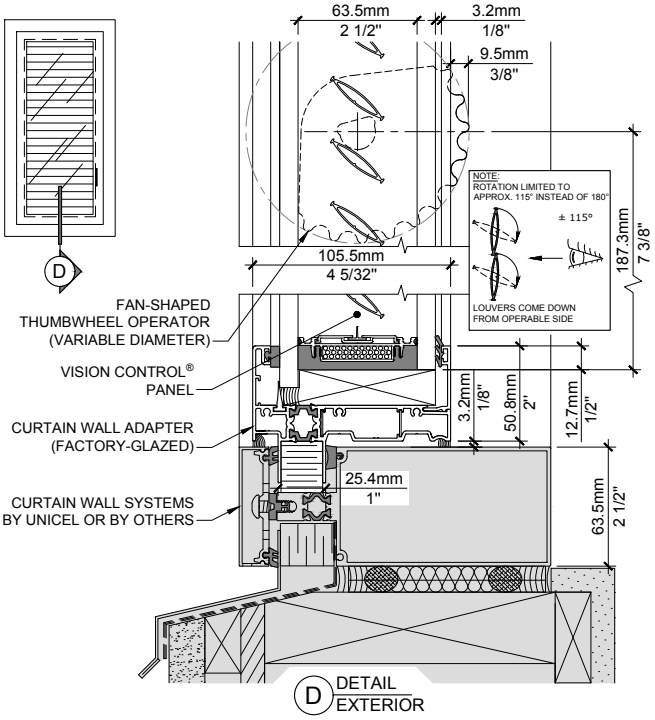

OFFSET TRIPLE GLAZED

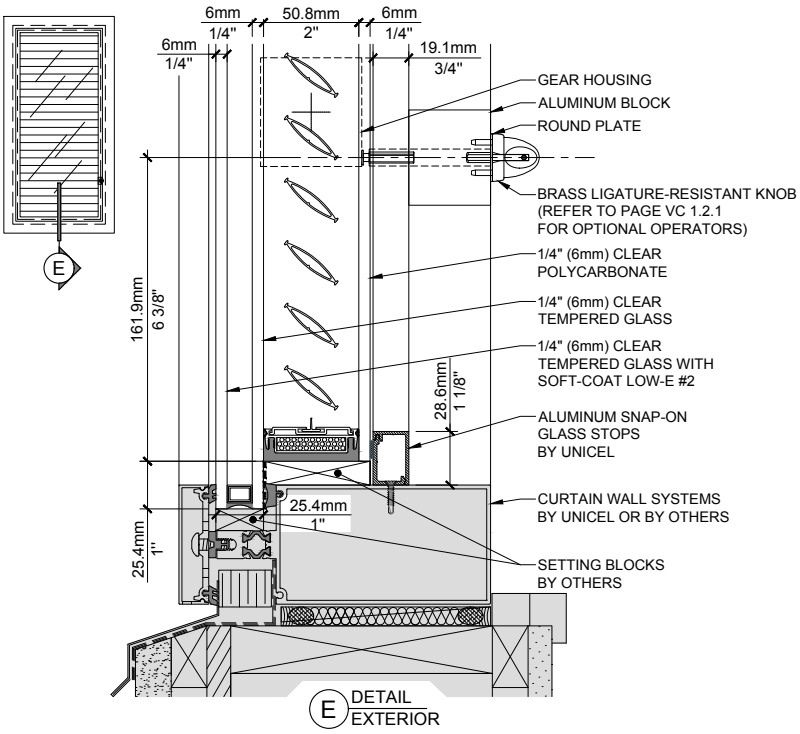

Unicel Architectural Corp.
2155 Fernand-Lafontaine
Longueuil • Québec • J4G 2J4 • Canada

VISION CONTROL®

VC 2.2.2

T: 800.668.1580 | 450.670.6844 • F: 866.496.2628 | 450.670.7144
E: unicel@unicelarchitectural.com • www.unicelarchitectural.com

UNICEL
ARCHITECTURAL

VISION CONTROL®
EXTERIOR WALL
PSYCHIATRIC APPLICATION

EXISTING WALL

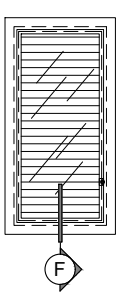

AAMA 501.8-TESTED FOR 2000 FT-LB HUMAN IMPACTS

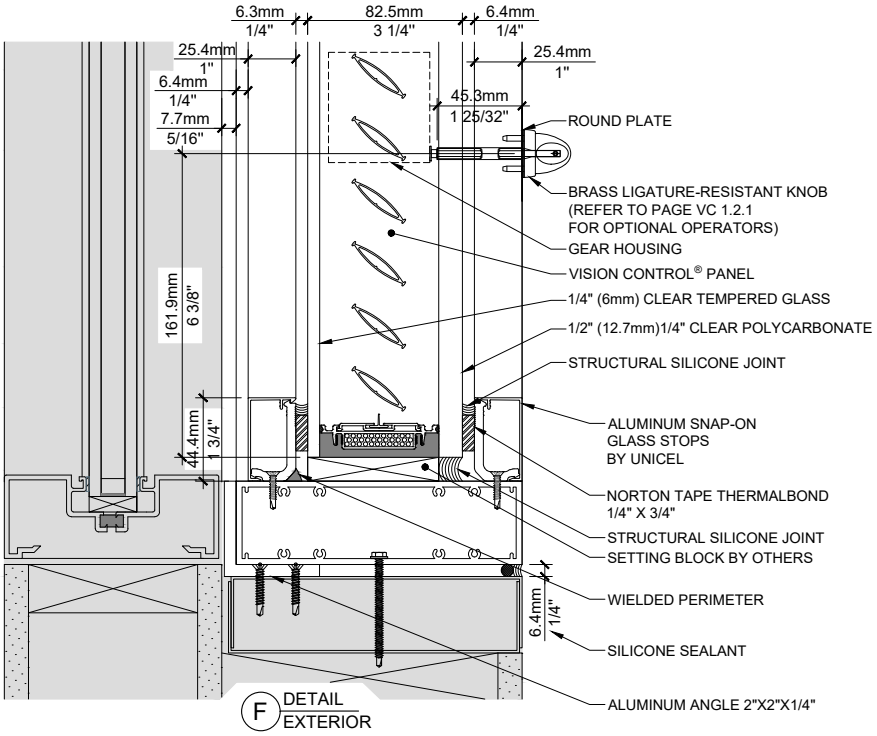

CURTAIN WALL

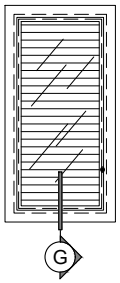

AAMA 501.8-TESTED FOR 2000 FT-LB HUMAN IMPACTS

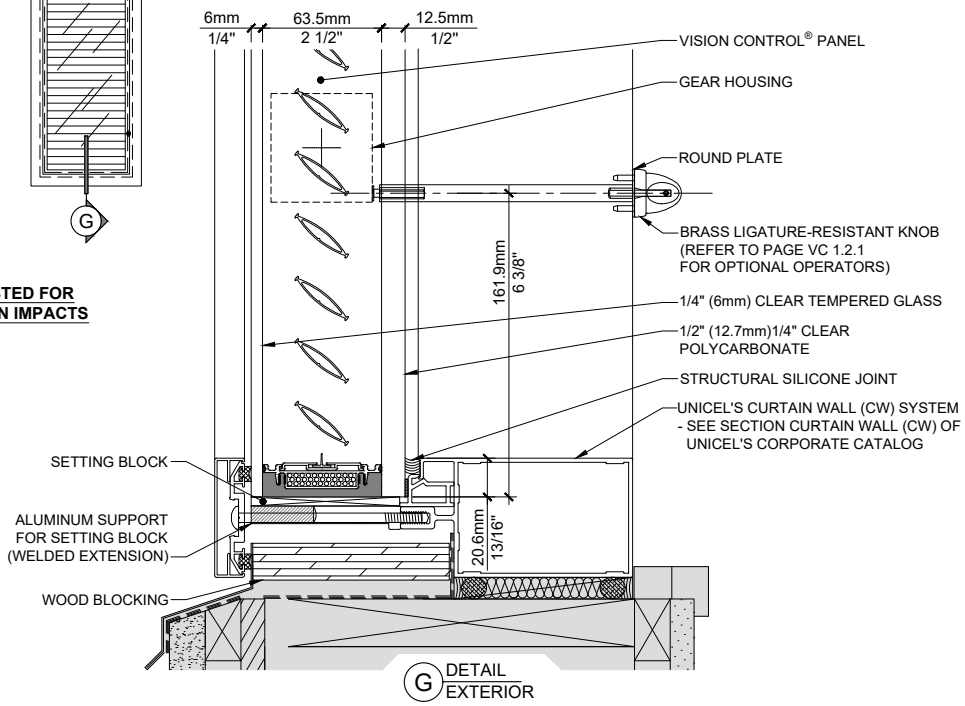

Unicel Architectural Corp.
2155 Fernand-Lafontaine
Longueuil • Québec • J4G 2J4 • Canada

VC 2.2.3

T: 800.668.1580 | 450.670.6844 • F: 866.496.2628 | 450.670.7144
E: unicel@unicelarchitectural.com • www.unicelarchitectural.com

UNICEL
ARCHITECTURAL

VISION CONTROL®
DOOR CONFIGURATION

CRANK HANDLE OPERABLE ON ONE OR BOTH SIDE(S)

VISION CONTROL® FURNISHED FACTORY-GLAZED IN UNICEL'S ALUMINUM TRIMS

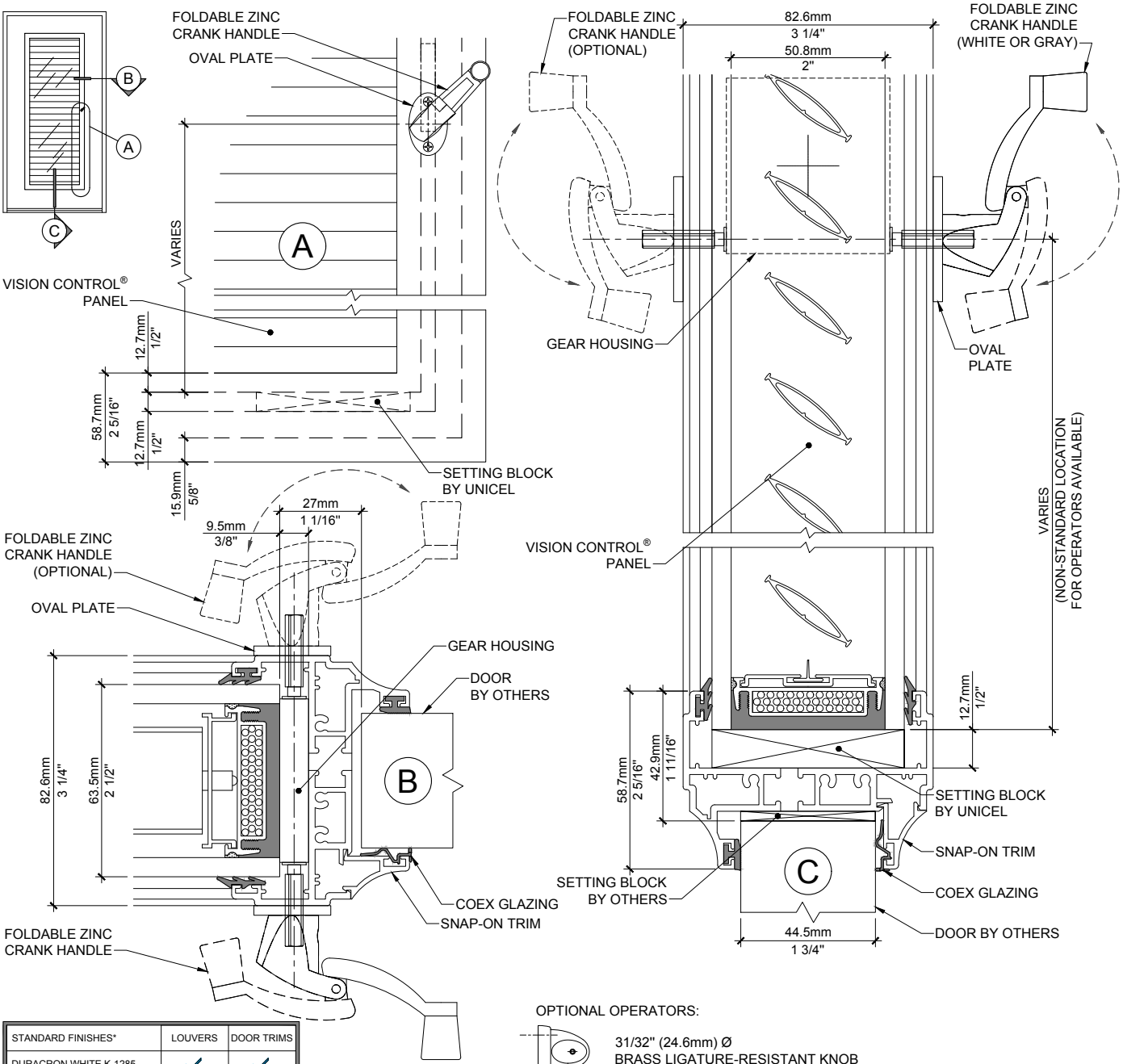

STANDARD FINISHES*	LOUVERS	DOOR TRIMS
DURACRON WHITE K-1285	✓	✓
DURACRON GRAY K-20794	✓	✓
CLEAR ANODIZED (CLASS II)		✓

* OTHER FINISHES AVAILABLE UPON REQUEST.

OPTIONAL OPERATORS:

31/32" (24.6mm) Ø
BRASS LIGATURE-RESISTANT KNOB
(PAINTED WHITE OR GRAY)

3/4" (19.1mm) Ø
ALUMINUM KNOB
- WHITE K-1285
- GRAY K-20794
- CUSTOM COLORS

Unicel Architectural Corp.
2155 Fernand-Lafontaine
Longueuil • Québec • J4G 2J4 • Canada

VISION CONTROL®

VC 3.1.1

T: 800.668.1580 | 450.670.6844 • F: 866.496.2628 | 450.670.7144
E: unicel@unicelarchitectural.com • www.unicelarchitectural.com

UNICEL
ARCHITECTURAL

VISION CONTROL®
DOOR CONFIGURATION

THUMBWHEEL OPERABLE ON BOTH SIDES

VISION CONTROL® FURNISHED FACTORY-GLAZED IN UNICEL'S ALUMINUM TRIMS

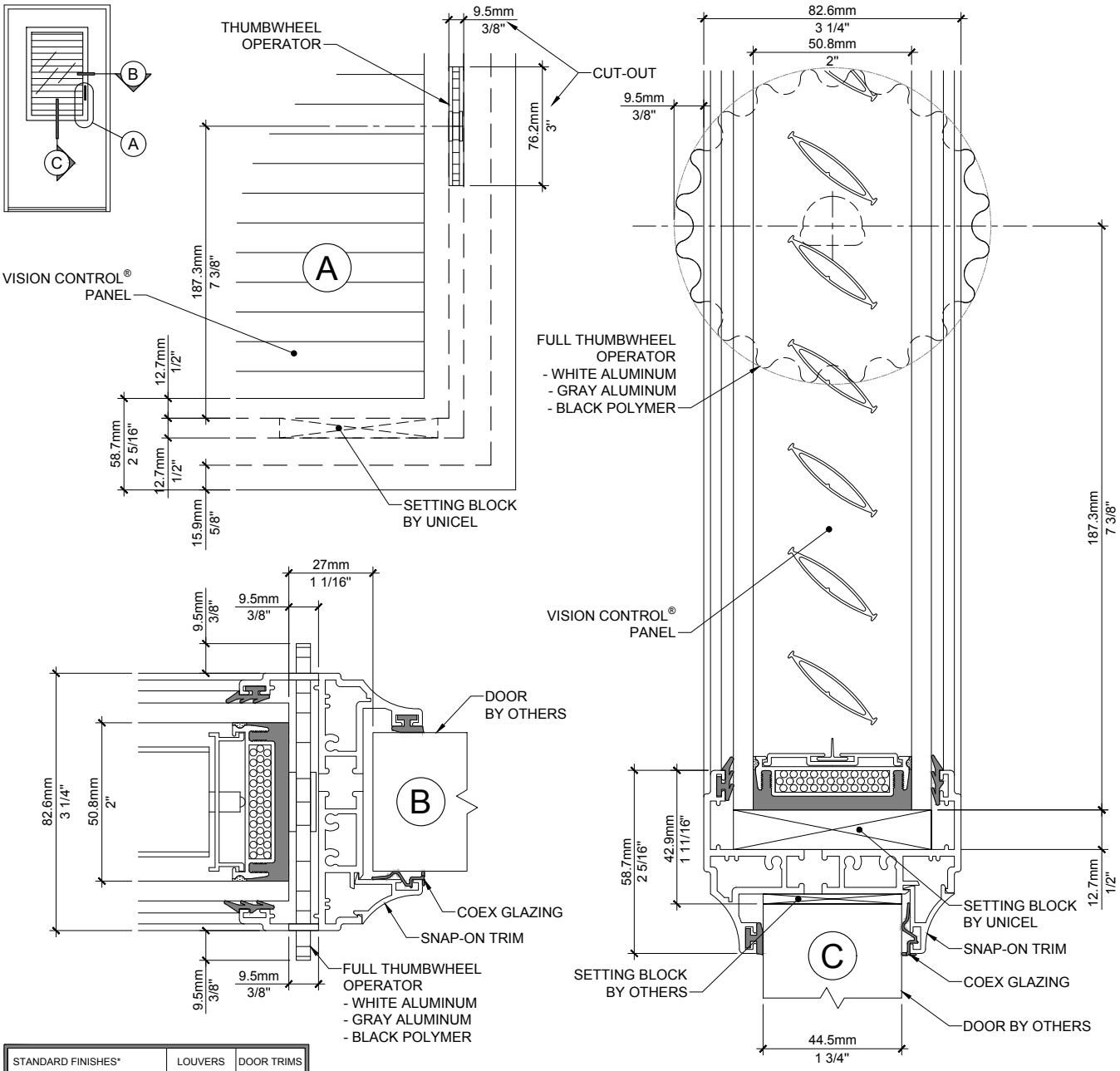

STANDARD FINISHES*	LOUVERS	DOOR TRIMS
DURACRON WHITE K-1285	✓	✓
DURACRON GRAY K-20794	✓	✓
CLEAR ANODIZED (CLASS II)		✓

* OTHER FINISHES AVAILABLE UPON REQUEST.

Unicel Architectural Corp.
2155 Fernand-Lafontaine
Longueuil • Québec • J4G 2J4 • Canada

VISION CONTROL®

VC 3.1.2

UNICEL
ARCHITECTURAL

VISION CONTROL®
DOOR CONFIGURATION

FAN-SHAPED THUMBWHEEL OPERABLE ON ONE SIDE

VISION CONTROL® FURNISHED FACTORY-GLAZED IN UNICEL'S ALUMINUM TRIMS

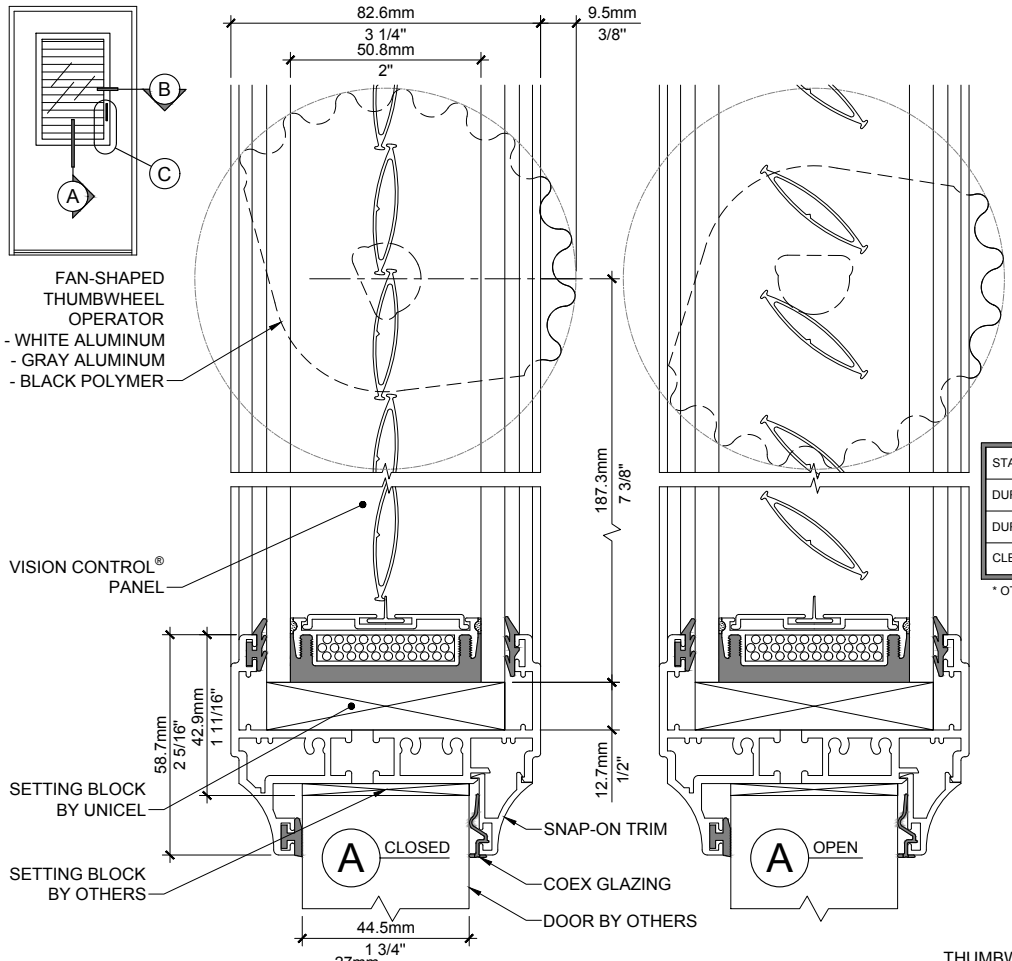

NOTE:
ROTATION LIMITED TO APPROX. 115° INSTEAD OF 180°

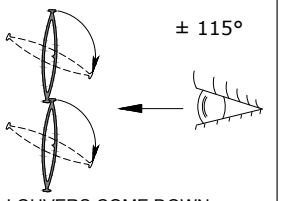

LOUVERS COME DOWN FROM OPERABLE SIDE

STANDARD FINISHES*	LOUVERS	DOOR TRIMS
DURACRON WHITE K-1285	✓	✓
DURACRON GRAY K-20794	✓	✓
CLEAR ANODIZED (CLASS II)		✓

* OTHER FINISHES AVAILABLE UPON REQUEST.

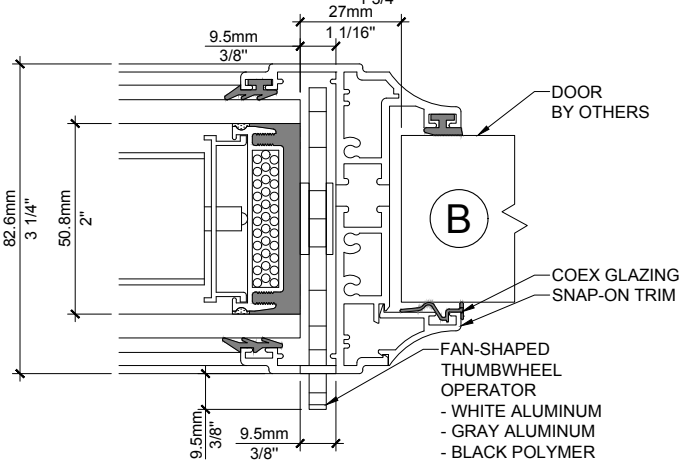

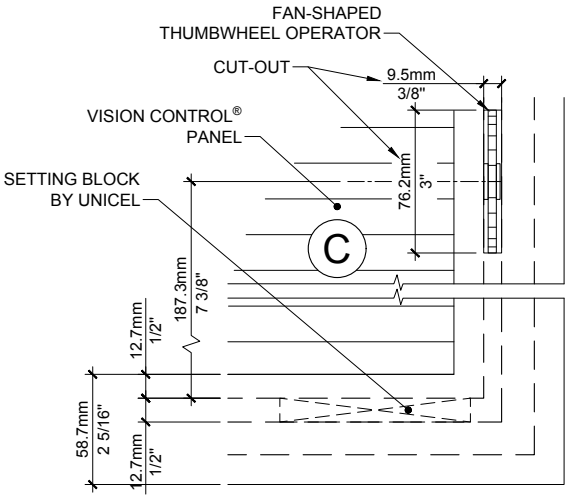

Unicel Architectural Corp.
2155 Fernand-Lafontaine
Longueuil • Québec • J4G 2J4 • Canada

VISION CONTROL®

VC 3.1.3

T: 800.668.1580 | 450.670.6844 • F: 866.496.2628 | 450.670.7144
E: unicel@unicelarchitectural.com • www.unicelarchitectural.com

UNICEL
ARCHITECTURAL

VISION CONTROL®
DOOR CONFIGURATION

SUGGESTED CUSTOM DOOR TRIMS BY OTHERS

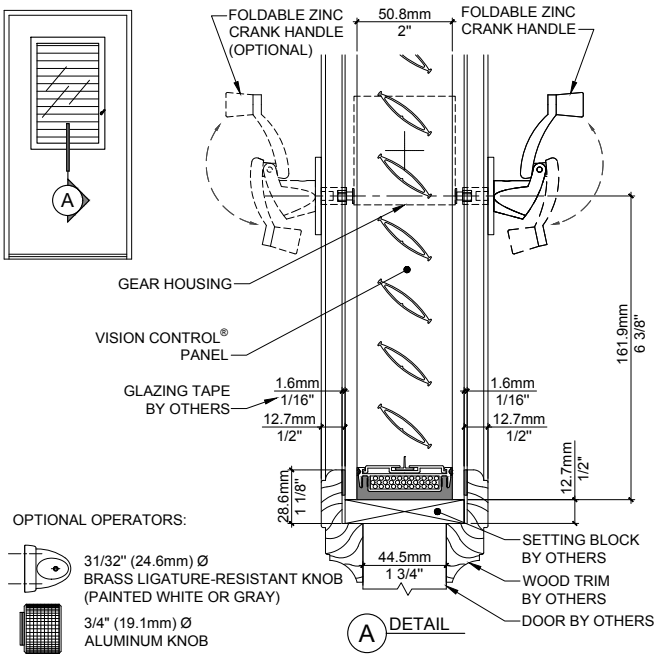

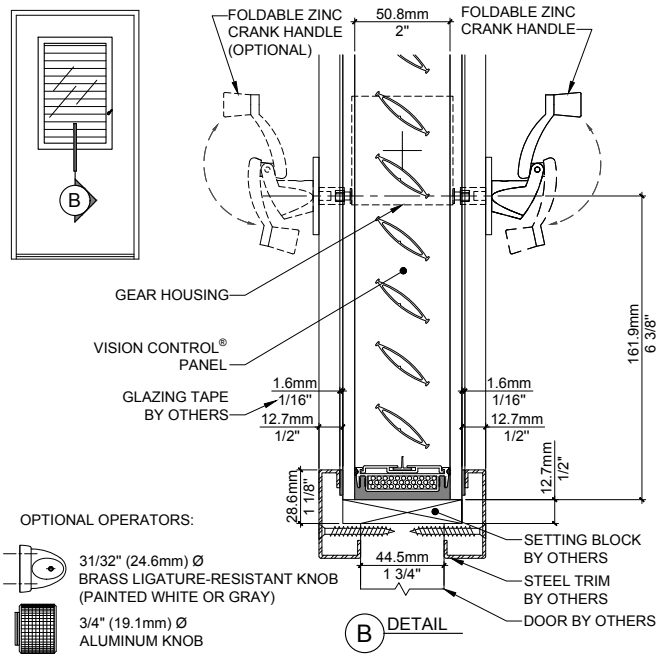

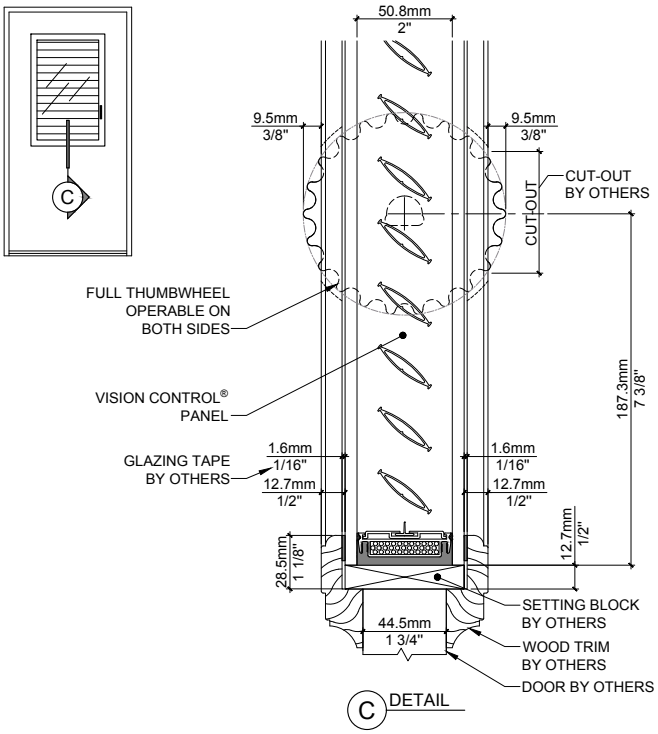

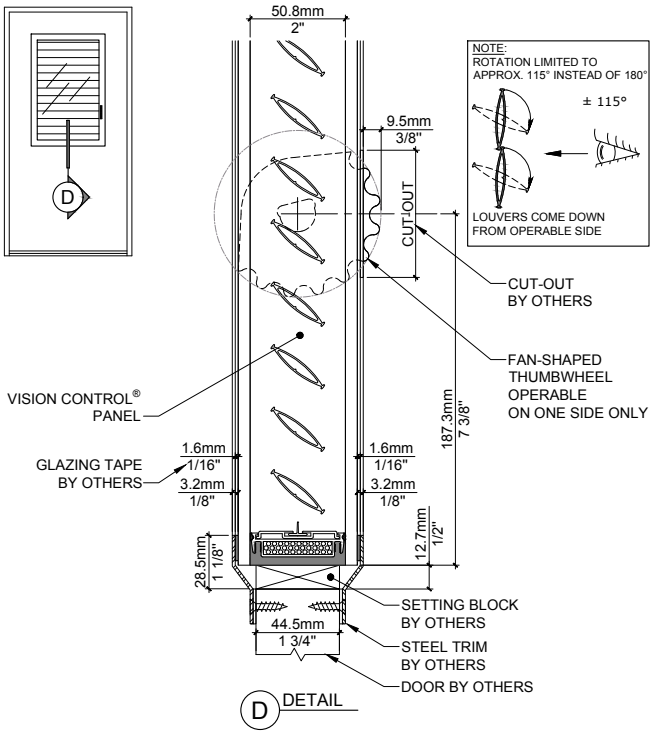

Unicel Architectural Corp.
2155 Fernand-Lafontaine
Longueuil • Québec • J4G 2J4 • Canada

VISION CONTROL®

VC 3.2

T: 800.668.1580 | 450.670.6844 • F: 866.496.2628 | 450.670.7144
E: unicel@unicelarchitectural.com • www.unicelarchitectural.com

SOMFY® MOTOR

1- WORM GEAR SHAFT
2- GEARING WHEEL
3- GEAR HOUSING 2 1/8" x 2 9/32" (54mm x 57.9mm)
4- PLASTIC COVER & SCREW #5-40 x 1/2" (12.7mm)
5- FLEXIBLE CABLE
6- SOMFY® MOTOR
7- VISION CONTROL® PANEL

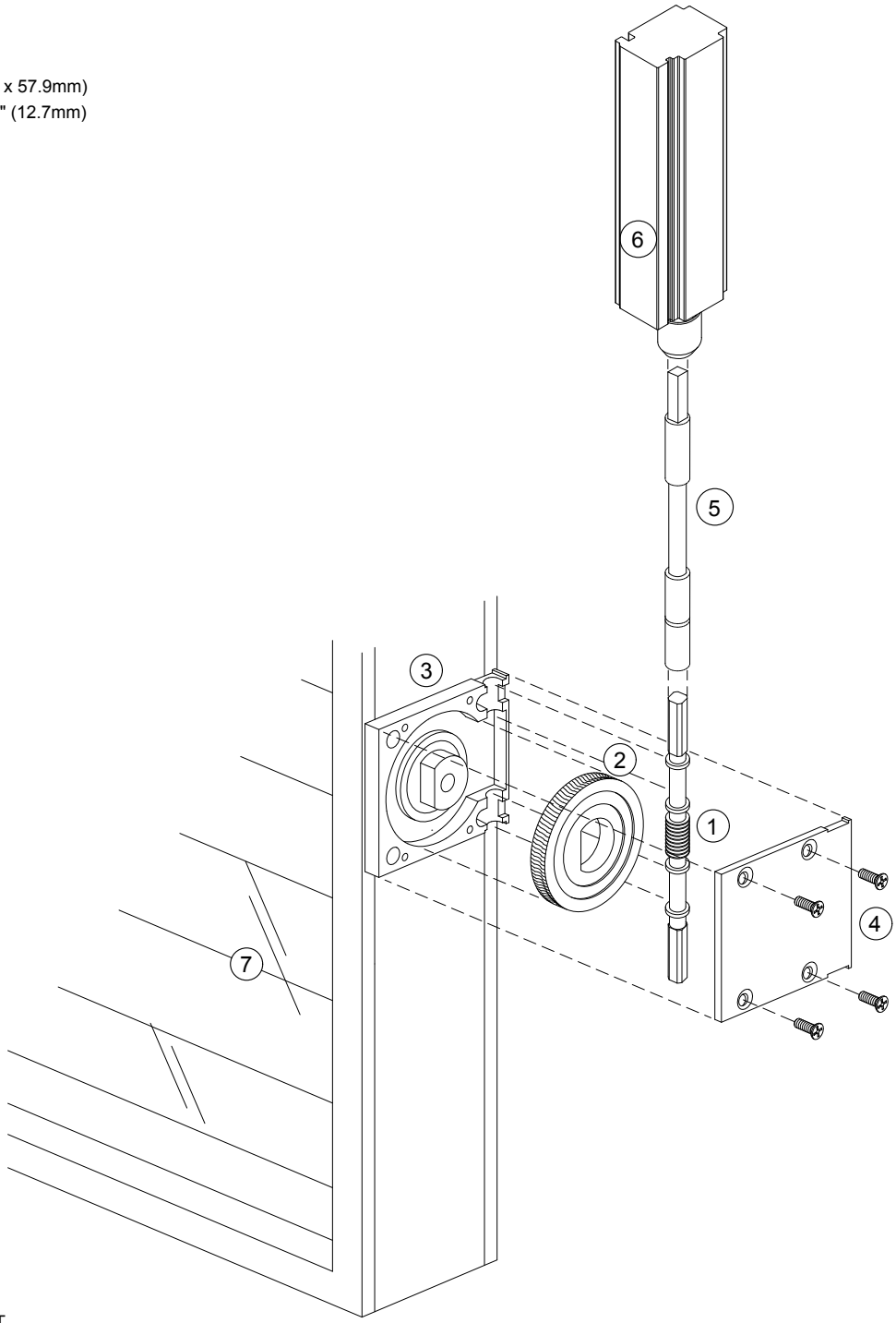

CARACTÉRISTIQUES DU MOTEUR:

- MODEL: SOMFY®
- APPROX. DIM.: 29/32" x 1 7/32" (23.1mm x 31.2mm)
- AMP: 1.2
- VOLTS: 12 DC
- RPM: 68
- RTS: 433.42 MHZ

MOTOR TYPE TO BE DETERMINED BY UNICEL'S ENGINEERING DEPARTMENT

NOTE: REFER TO APPROVED SHOP DRAWINGS FOR MORE INFORMATION

UNICEL
ARCHITECTURAL

VISION CONTROL®
GROUPED MOTORIZATION

SOMFY® MOTOR

UNLIMITED NUMBER OF VISION CONTROL® PANELS (ONE MOTOR PER UNIT)

1- SOMFY® MOTOR
2- GEAR HOUSING 2 1/8" x 2 9/32" (54mm x 57.9mm)
3- FLEXIBLE CABLE
4- VISION CONTROL® PANEL

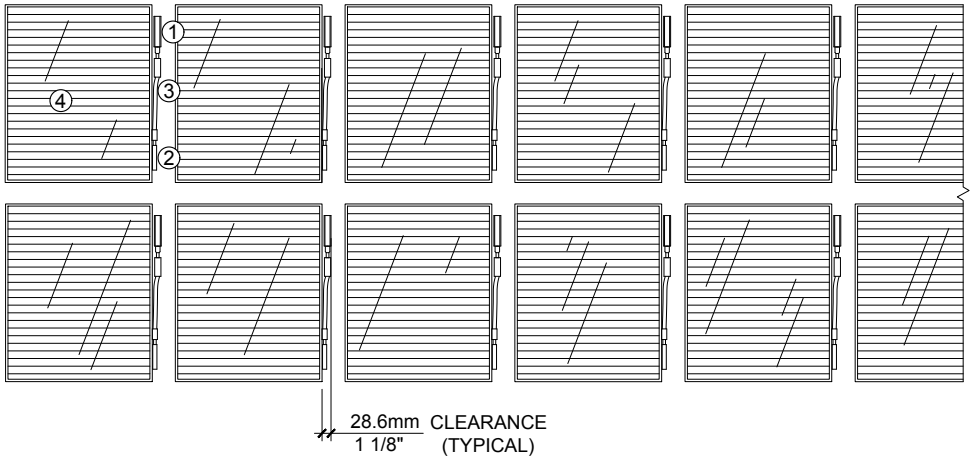

Radio Technology Somfy®

WIRING DIAGRAM FOR 12 VOLT DC MOTOR

MOTOR SPECIFICATIONS:

- MODEL: SOMFY®
- APPROX. DIM.: 29/32" x 1 7/32" (23.1mm x 31.2mm)
- AMP: 1.2
- VOLTS: 12 DC
- RPM: 68
- RTS: 433.42 MHZ

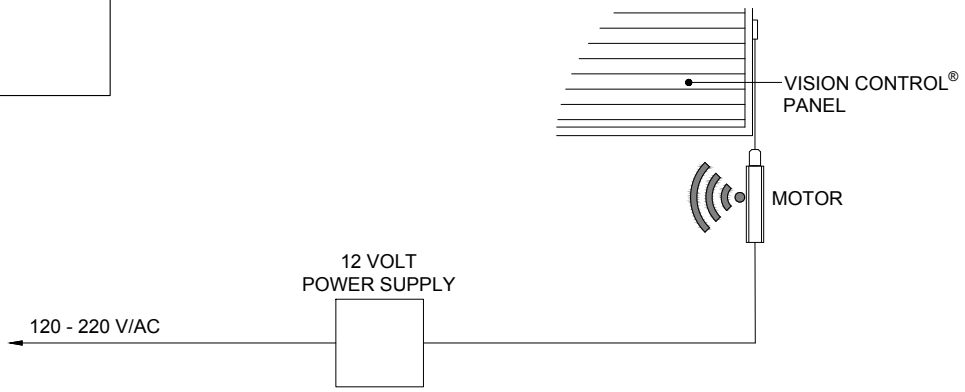

Unicel Architectural Corp.
2155 Fernand-Lafontaine
Longueuil • Québec • J4G 2J4 • Canada

VISION® CONTROL

VC 4.1.2

T: 800.668.1580 | 450.670.6844 • F: 866.496.2628 | 450.670.7144
E: unicel@unicelarchitectural.com • www.unicelarchitectural.com

SOMFY® MOTOR

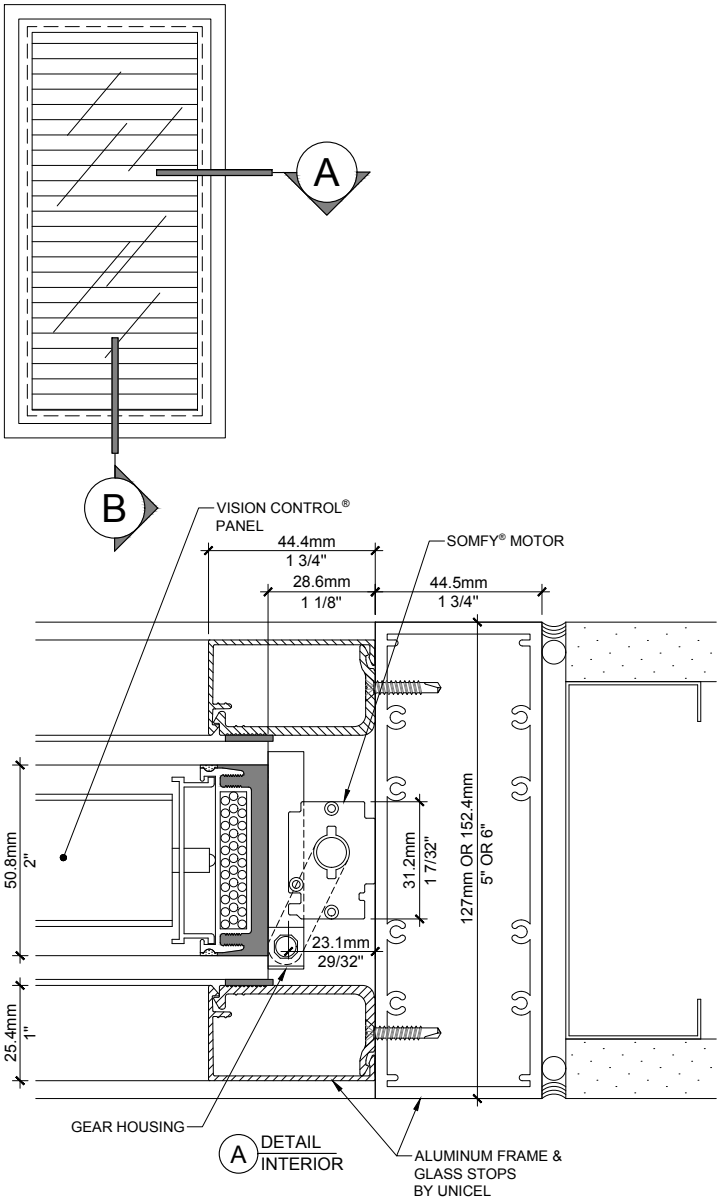

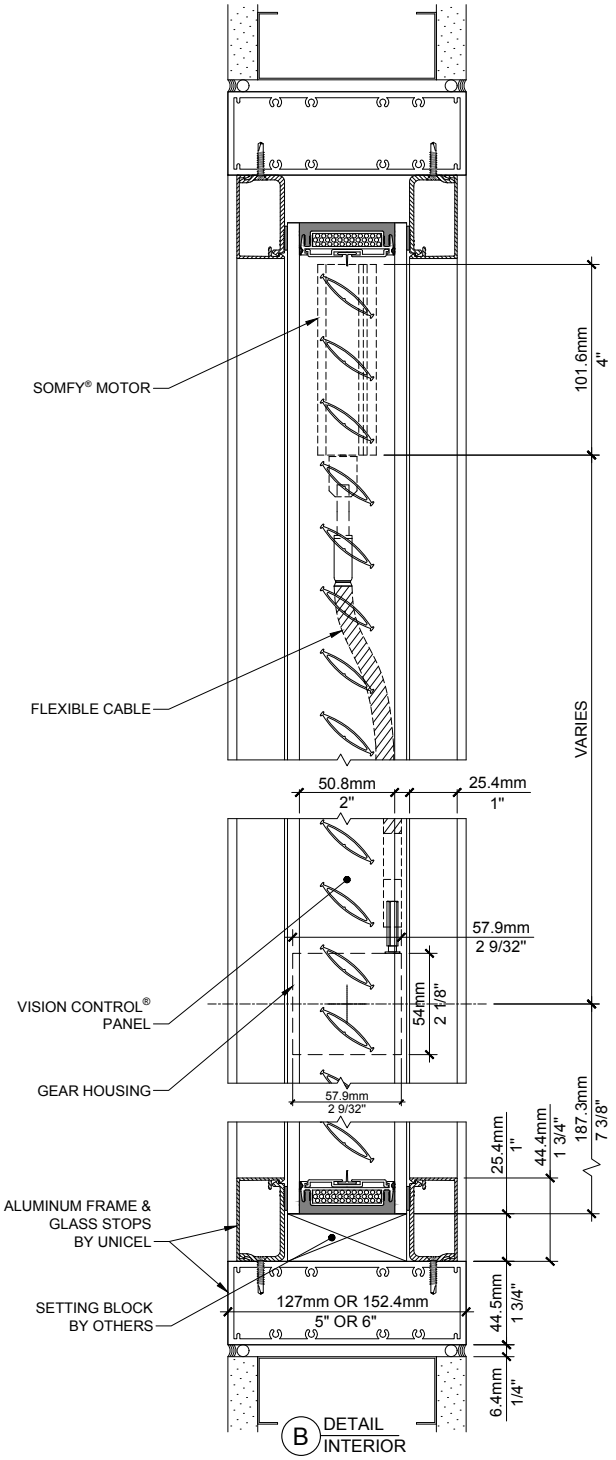

MOTOR SPECIFICATIONS:

- MODEL: SOMFY®
- APPROX. DIM.: 29/32" x 1 7/32" (23.1mm x 31.2mm)
- AMP: 1.2
- VOLTS: 12 DC
- RPM: 68
- RTS: 433.42 MHZ

Unicel Architectural Corp.
2155 Fernand-Lafontaine
Longueuil • Québec • J4G 2J4 • Canada

VISION CONTROL®

VC 4.1.3

BALDOR MOTOR

1- WORM GEAR SHAFT
2- GEARING WHEEL
3- GEAR HOUSING 2 1/8" x 2 9/32" (54mm x 57.9mm)
4- PLASTIC COVER & SCREW #5-40 x 1/2" (12.7mm)
5- FLEXIBLE CABLE
6- CORNER DRIVE
7- BALDOR MOTOR
8- RIGID SHAFT 5/8" Ø (15.9mm)
9- VISION CONTROL® PANEL
10- SET SCREW #10-24 x 3/16" (4.8mm)

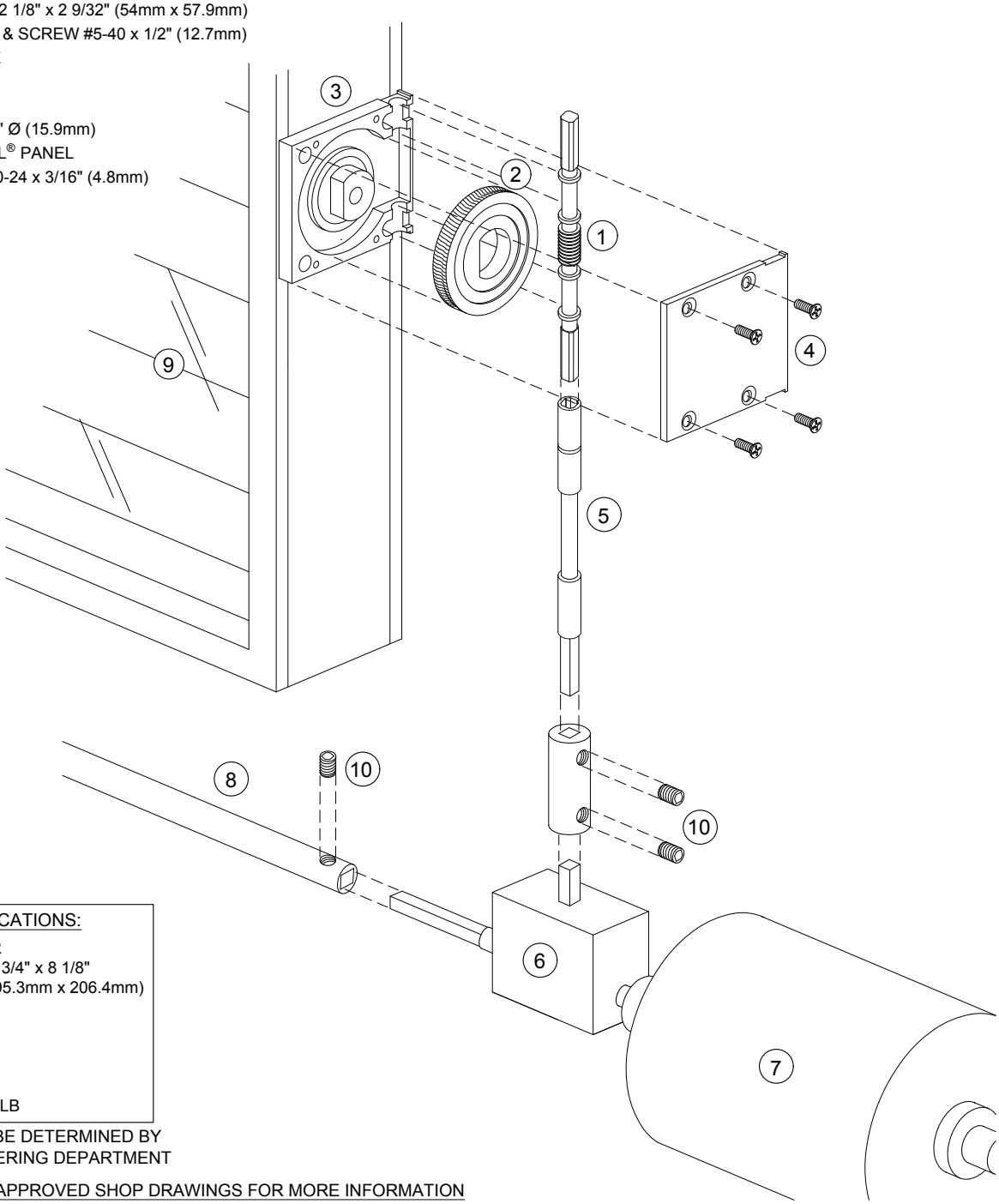

MOTOR SPECIFICATIONS:

- MODEL: BALDOR
- APPROX. DIM.: 3 3/4" x 8 1/8" (95.3mm x 206.4mm)
- AMP: 1
- VOLTS: 120 AC
- RPM: 163
- HZ: 60
- PHASE: 1
- TORQUE 28.5 IN-LB

MOTOR TYPE TO BE DETERMINED BY UNICEL'S ENGINEERING DEPARTMENT

NOTE: REFER TO APPROVED SHOP DRAWINGS FOR MORE INFORMATION

Unicel Architectural Corp.
2155 Fernand-Lafontaine
Longueuil • Québec • J4G 2J4 • Canada

VC 4.2.1

UNICEL
ARCHITECTURAL

VISION CONTROL®
GROUPED MOTORIZATION
(WITH LIMIT SWITCH)

BALDOR MOTOR

MAXIMUM OF 12 VISION CONTROL® PANELS PER MOTOR (MAY VARY DEPENDING ON SIZES)

1- BALDOR MOTOR
2- CORNER DRIVE
3- GEAR HOUSING 2 1/8" x 2 9/32" (54mm x 57.9mm)
4- FLEXIBLE CABLE
5- RIGID SHAFT 5/8" Ø (15.9mm)
6- VISION CONTROL® PANEL
7- JUNCTION BOX
8- LIMIT SWITCH

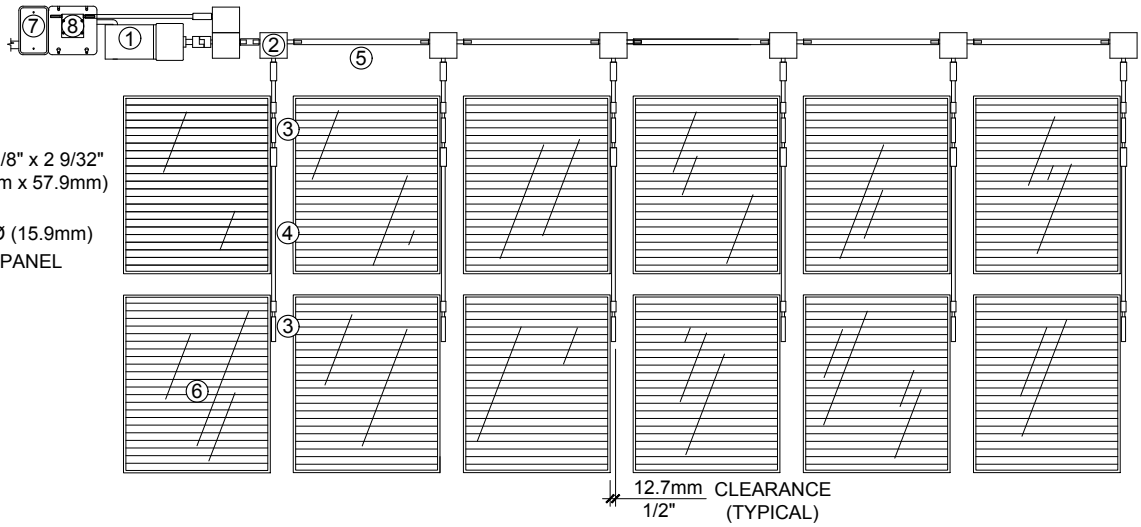

WIRING DIAGRAM FOR 120 VOLT AC MOTOR WITH LIMIT SWITCH

MOTOR SPECIFICATIONS:

- MODEL: BALDOR
- APPROX. DIM.: 3 3/4" x 8 1/8" (95.3mm x 206.4mm)
- AMP: 1
- VOLTS: 120 AC
- RPM: 163
- HZ: 60
- PHASE: 1
- TORQUE 28.5 IN-LB

ELECTRICAL DIAGRAM

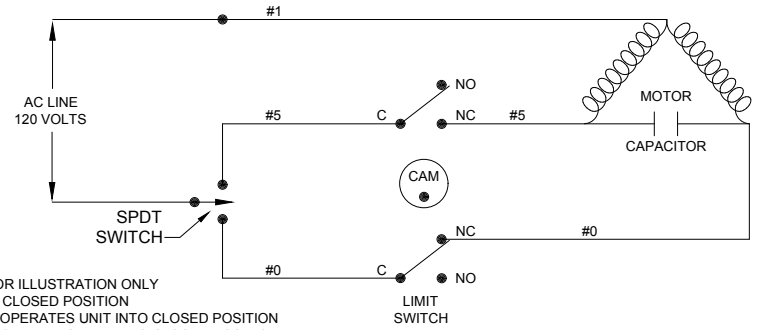

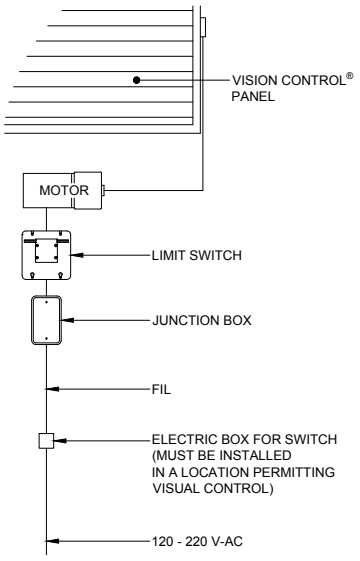

NOTES:

1- SWITCH SPDT SHOWN FOR ILLUSTRATION ONLY
2- LIMIT SWITCH SHOWN IN CLOSED POSITION
3- POWER TO THE #5 WIRE OPERATES UNIT INTO CLOSED POSITION
4- POWER TO THE #0 WIRE OPERATES UNIT INTO CLOSED POSITION

Unicel Architectural Corp.
2155 Fernand-Lafontaine
Longueuil • Québec • J4G 2J4 • Canada

VISION CONTROL®

VC 4.2.2

T: 800.668.1580 | 450.670.6844 • F: 866.496.2628 | 450.670.7144
E: unicel@unicelarchitectural.com • www.unicelarchitectural.com

UNICEL
ARCHITECTURAL

VISION CONTROL®
GROUPED MOTORIZATION
(WITHOUT LIMIT SWITCH)

BALDOR MOTOR

MAXIMUM OF 12 VISION CONTROL® PANELS PER MOTOR (MAY VARY DEPENDING ON SIZES)

1- BALDOR MOTOR
2- CORNER DRIVE
3- GEAR HOUSING 2 1/8" x 2 9/32" (54mm x 57.9mm)
4- FLEXIBLE CABLE
5- RIGID SHAFT 5/8" Ø (15.9mm)
6- VISION CONTROL® PANEL
7- JUNCTION BOX

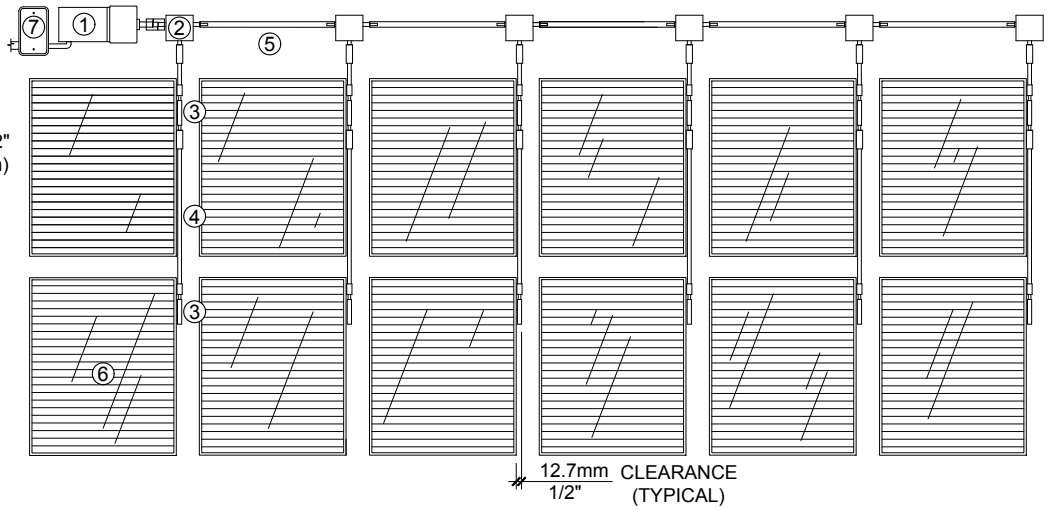

WIRING DIAGRAM FOR 120 VOLT AC MOTOR WITHOUT LIMIT SWITCH

MOTOR SPECIFICATIONS:
- MODEL: BALDOR
- APPROX. DIM.: 3 3/4" x 8 1/8" (95.3mm x 206.4mm)
- AMP: 1
- VOLTS: 120 AC
- RPM: 163
- HZ: 60
- PHASE: 1
- TORQUE 28.5 IN-LB

ELECTRICAL DIAGRAM

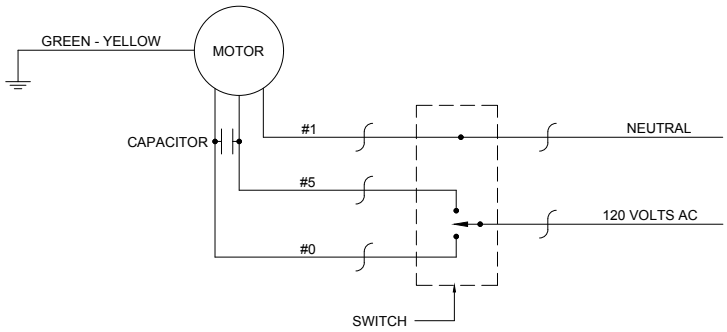

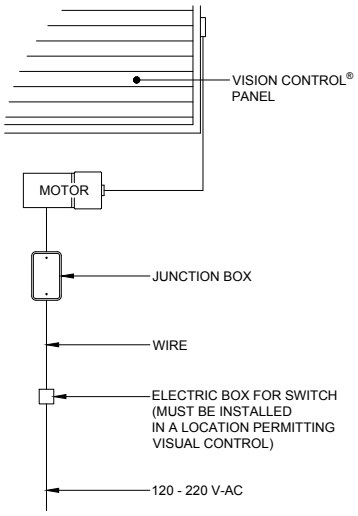

Unicel Architectural Corp.
2155 Fernand-Lafontaine
Longueuil • Québec • J4G 2J4 • Canada

VISION® CONTROL

VC 4.2.3

T: 800.668.1580 | 450.670.6844 • F: 866.496.2628 | 450.670.7144
E: unicel@unicelarchitectural.com • www.unicelarchitectural.com

BALDOR MOTOR
(SUGGESTED DETAIL)

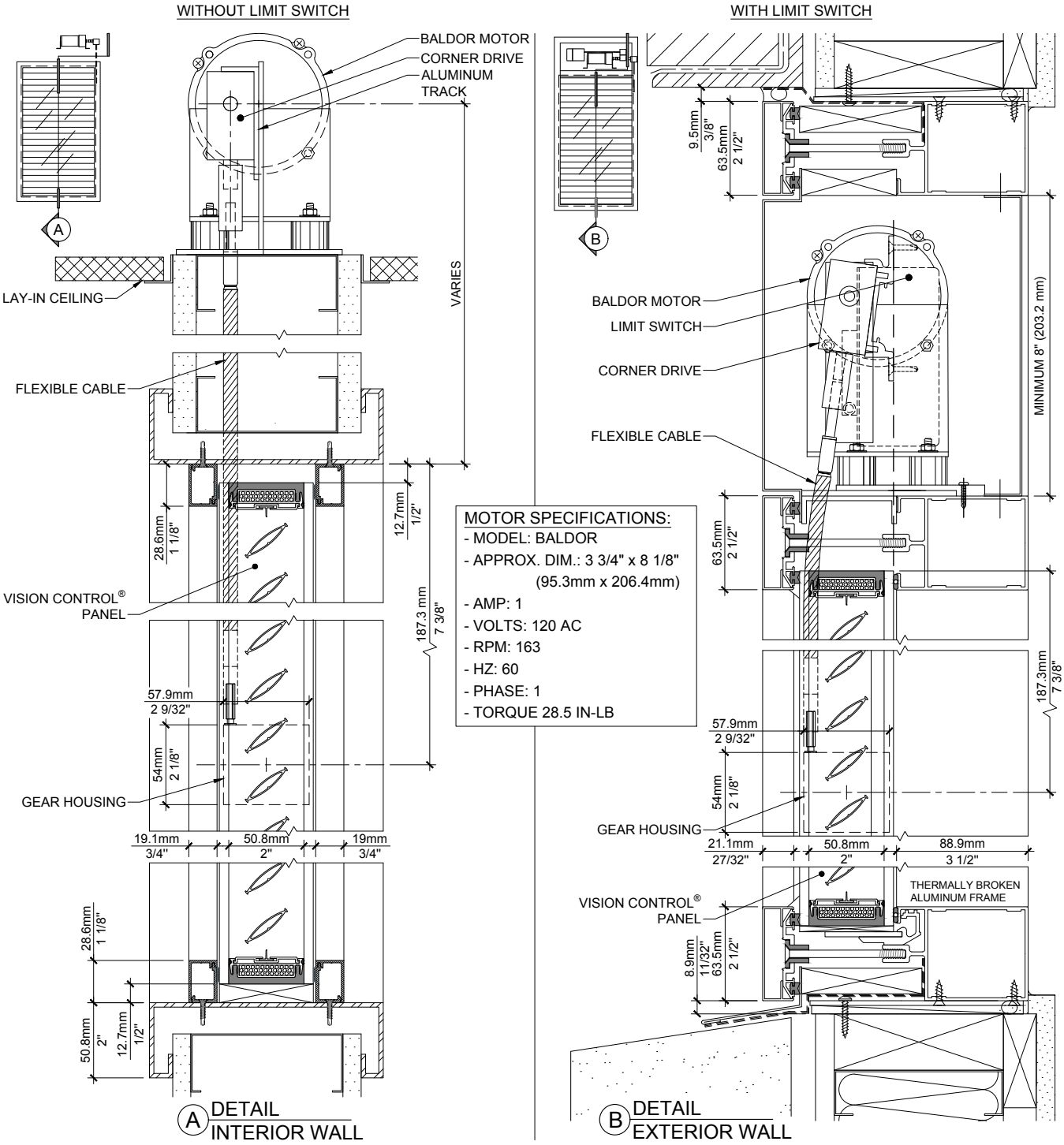

MOTOR SPECIFICATIONS:
- MODEL: BALDOR
- APPROX. DIM.: 3 3/4" x 8 1/8" (95.3mm x 206.4mm)
- AMP: 1
- VOLTS: 120 AC
- RPM: 163
- HZ: 60
- PHASE: 1
- TORQUE 28.5 IN-LB

Unicel Architectural Corp.
2155 Fernand-Lafontaine
Longueuil • Québec • J4G 2J4 • Canada

VC 4.2.4

PITTMAN MOTOR

1- WORM GEAR SHAFT
2- GEARING WHEEL
3- GEAR HOUSING 2 1/8" x 2 9/32" (54mm x 57.9mm)
4- PLASTIC COVER & SCREW #5-40 x 1/2" (12.7mm)
5- FLEXIBLE CABLE
6- CORNER DRIVE
7- PITTMAN MOTOR
8- RIGID SHAFT 5/8" Ø (15.9mm)
9- VISION CONTROL® PANEL
10- SET SCREW #10-24 x 3/16" (4.8mm)

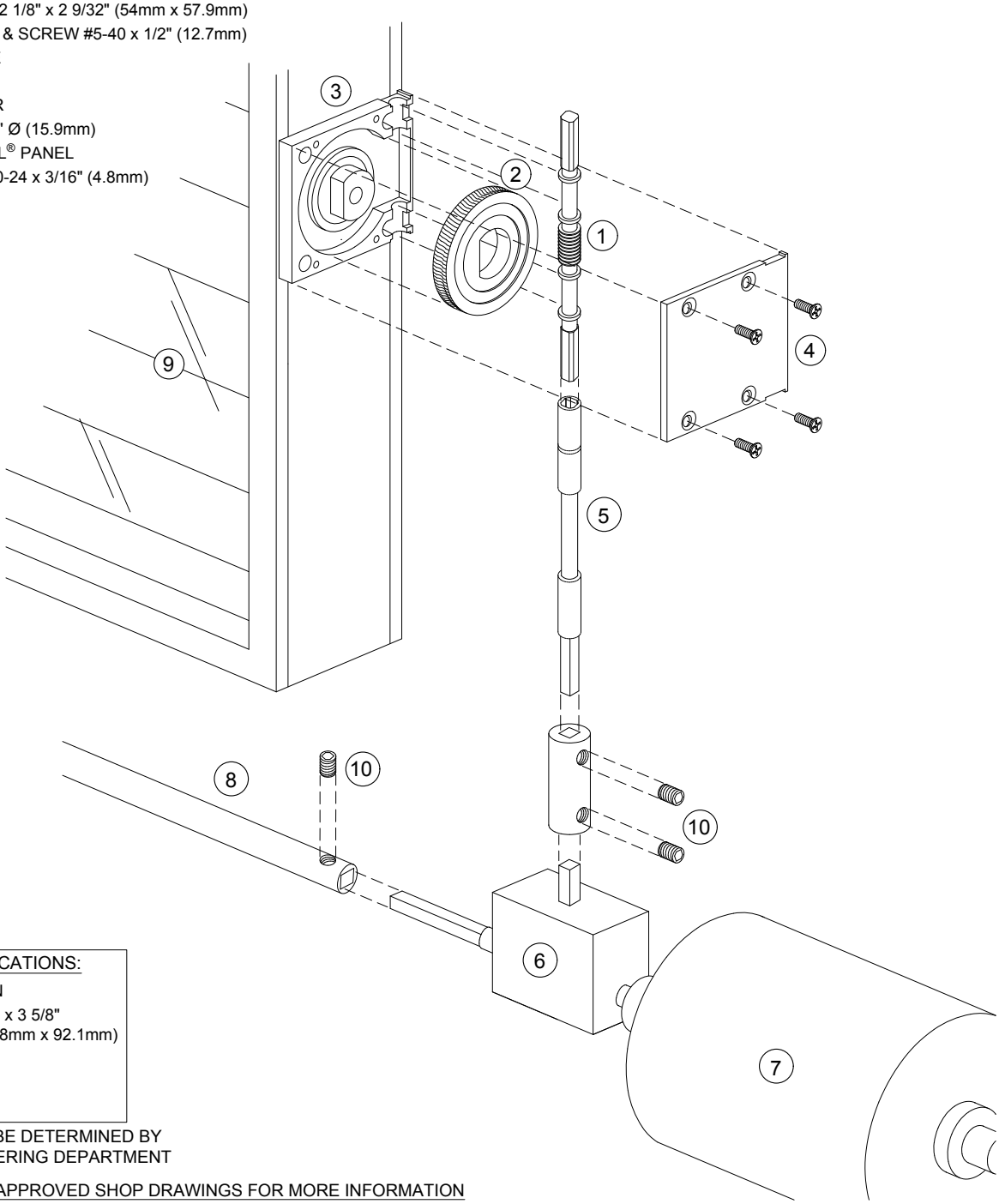

MOTOR SPECIFICATIONS:
- MODEL: PITTMAN
- APPROX. DIM.: 2" x 3 5/8" (50.8mm x 92.1mm)
- AMP: 0.6
- VOLTS: 24 DC
- RPM: 160

MOTOR TYPE TO BE DETERMINED BY UNICEL'S ENGINEERING DEPARTMENT

NOTE: REFER TO APPROVED SHOP DRAWINGS FOR MORE INFORMATION

PITTMAN MOTOR

MAXIMUM OF 4 VISION CONTROL® PANELS PER MOTOR (MAY VARY DEPENDING ON SIZES)

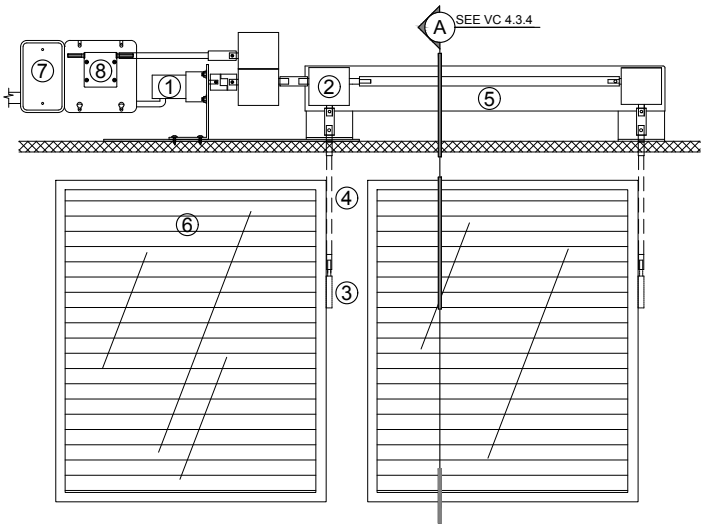

1- PITTMAN MOTOR
2- CORNER DRIVE
3- GEAR HOUSING 2 1/8" x 2 9/32" (54mm x 57.9mm)
4- FLEXIBLE CABLE
5- RIGID SHAFT 5/8" Ø (15.9mm)
6- VISION CONTROL® PANEL
7- JUNCTION BOX
8- LIMIT SWITCH

WIRING DIAGRAM FOR 24 VDC MOTOR WITH LIMIT SWITCH

MOTOR SPECIFICATIONS:
- MODEL: PITTMAN
- APPROX. DIM.: 2" x 3 5/8" (50.8mm x 92.1mm)
- AMP: 0.6
- VOLTS: 24 DC
- RPM: 160

ELECTRICAL DIAGRAM

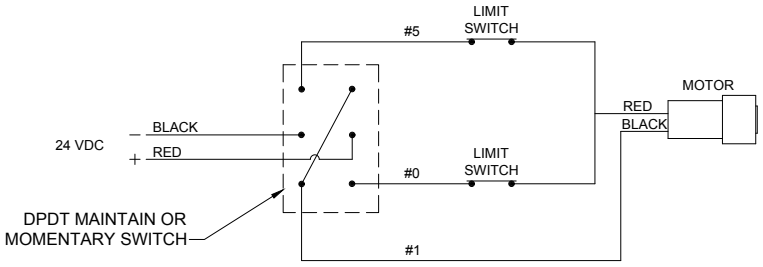

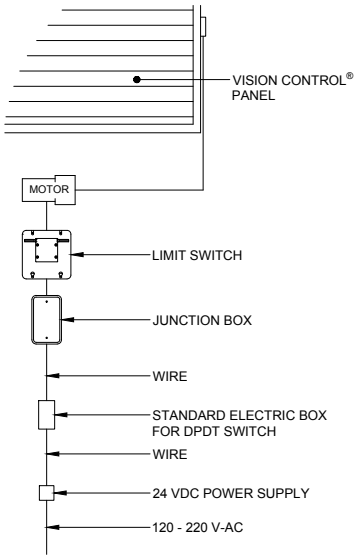

Unicel Architectural Corp.
2155 Fernand-Lafontaine
Longueuil • Québec • J4G 2J4 • Canada

VISION® CONTROL

T: 800.668.1580 | 450.670.6844 • F: 866.496.2628 | 450.670.7144
E: unicel@unicelarchitectural.com • www.unicelarchitectural.com

PITTMAN MOTOR

MAXIMUM OF 4 VISION CONTROL® PANELS PER MOTOR (MAY VARY DEPENDING ON SIZES)

1- PITTMAN MOTOR
2- CORNER DRIVE
3- GEAR HOUSING 2 1/8" x 2 9/32" (54mm x 57.9mm)
4- FLEXIBLE CABLE
5- RIGID SHAFT 5/8" Ø (15.9mm)
6- VISION CONTROL® PANEL
7- JUNCTION BOX

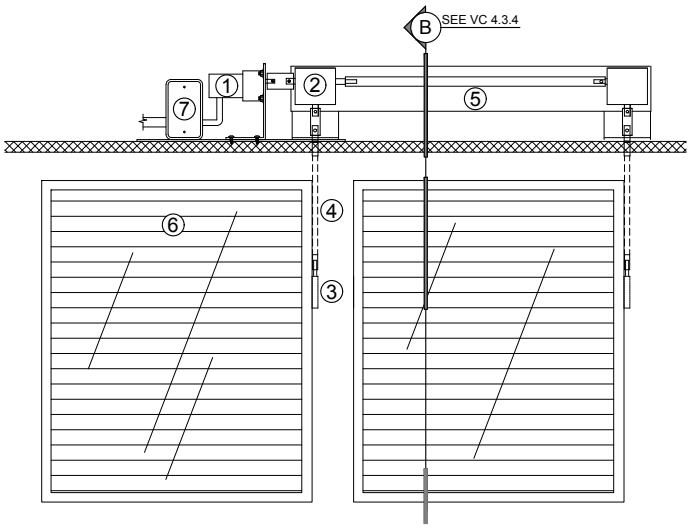

WIRING DIAGRAM FOR 24 VDC MOTOR WITHOUT LIMIT SWITCH

MOTOR SPECIFICATIONS:
- MODEL: PITTMAN
- APPROX. DIM.: 2" x 3 5/8" (50.8mm x 92.1mm)
- AMP: 0.6
- VOLTS: 24 DC
- RPM: 160

ELECTRICAL DIAGRAM

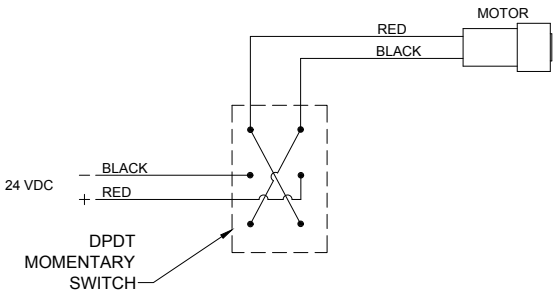

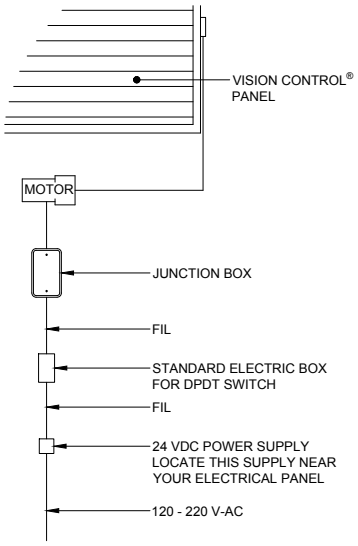

PITTMAN MOTOR
(SUGGESTED DETAIL)

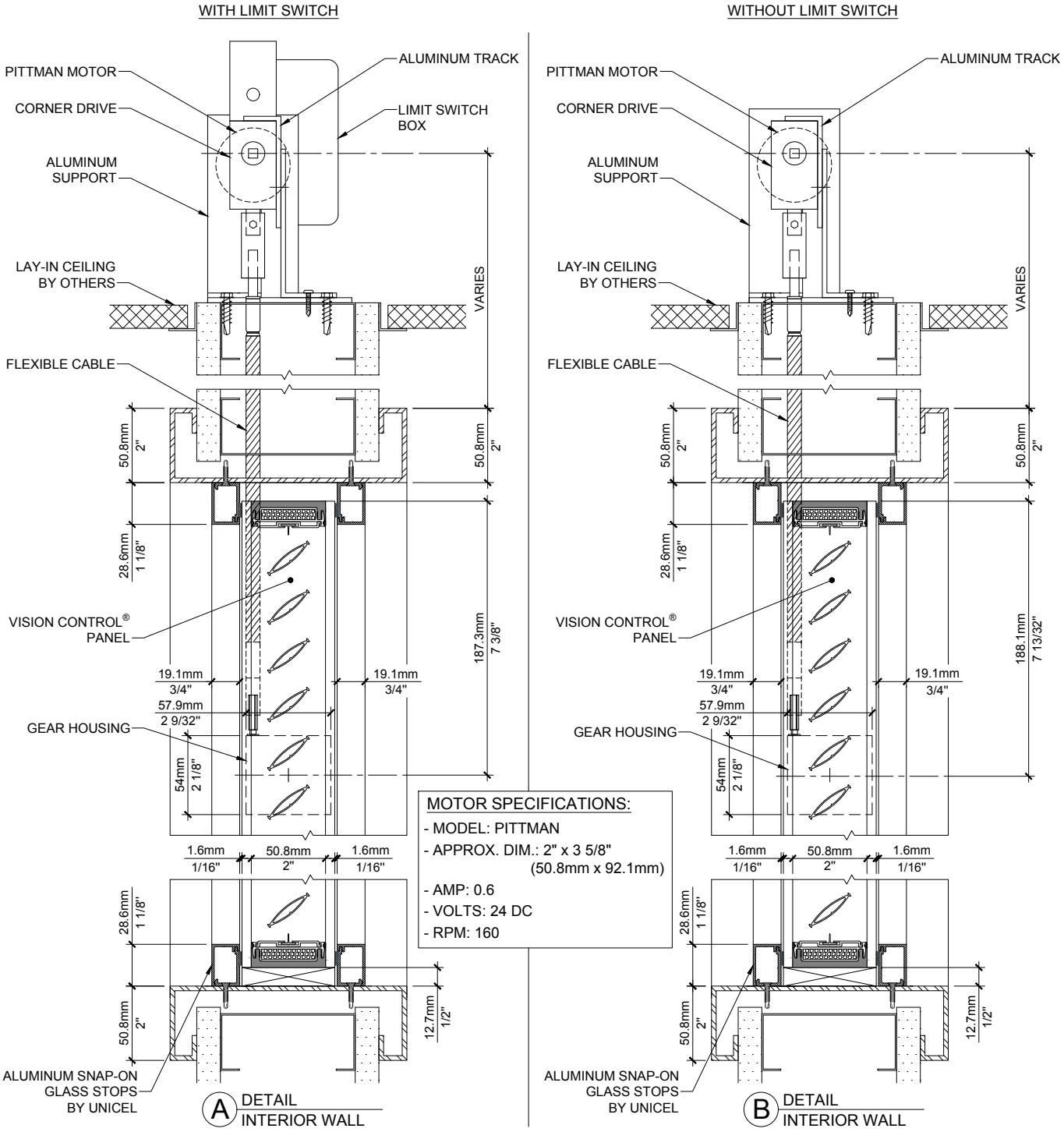

MOTOR SPECIFICATIONS:
- MODEL: PITTMAN
- APPROX. DIM.: 2" x 3 5/8" (50.8mm x 92.1mm)
- AMP: 0.6
- VOLTS: 24 DC
- RPM: 160

SKYLIGHT

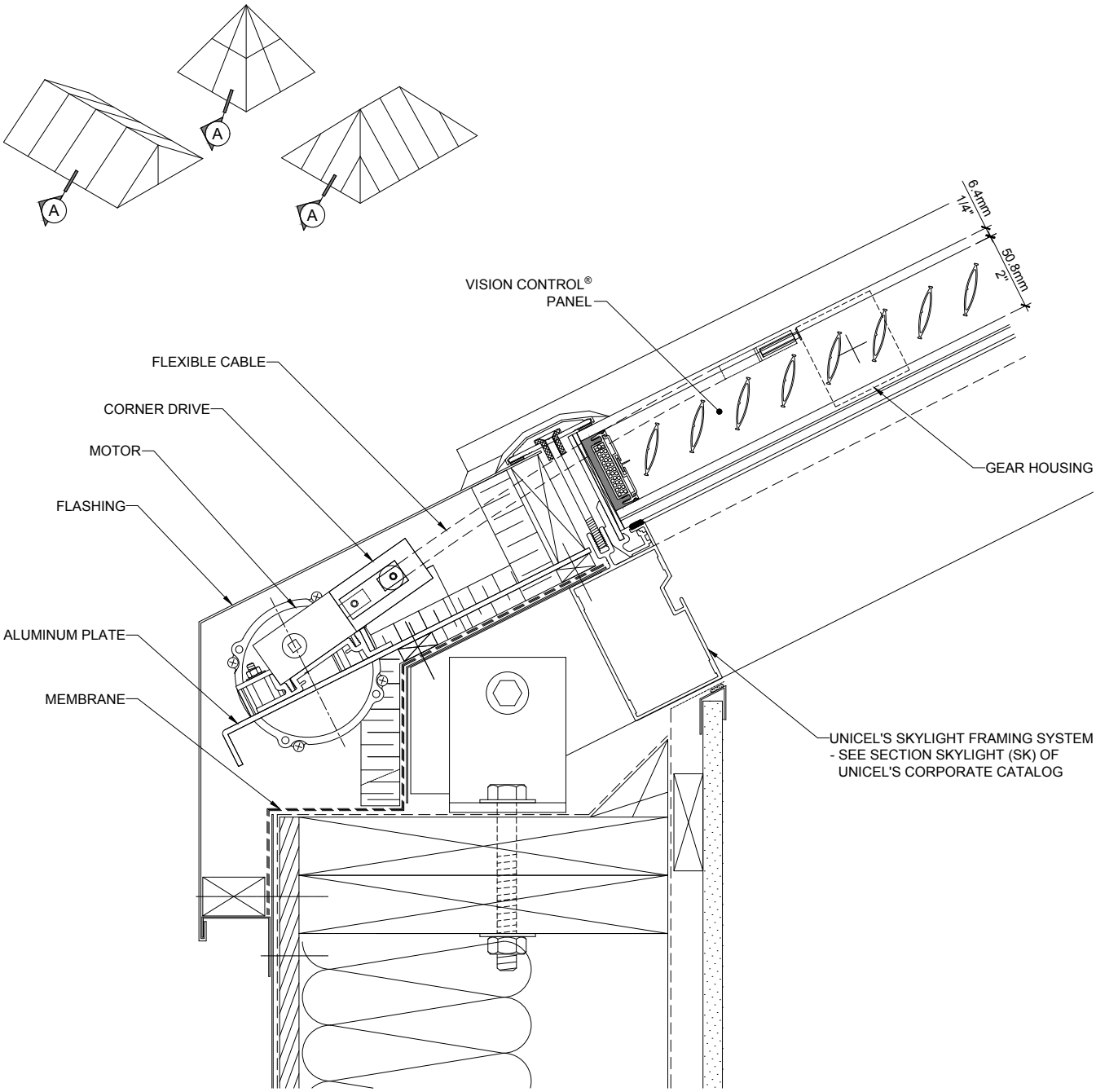

A DETAIL
EXTERIOR

UNICEL
ARCHITECTURAL

VISION CONTROL®
MOTORIZATION APPLICATION

SOLARIUM

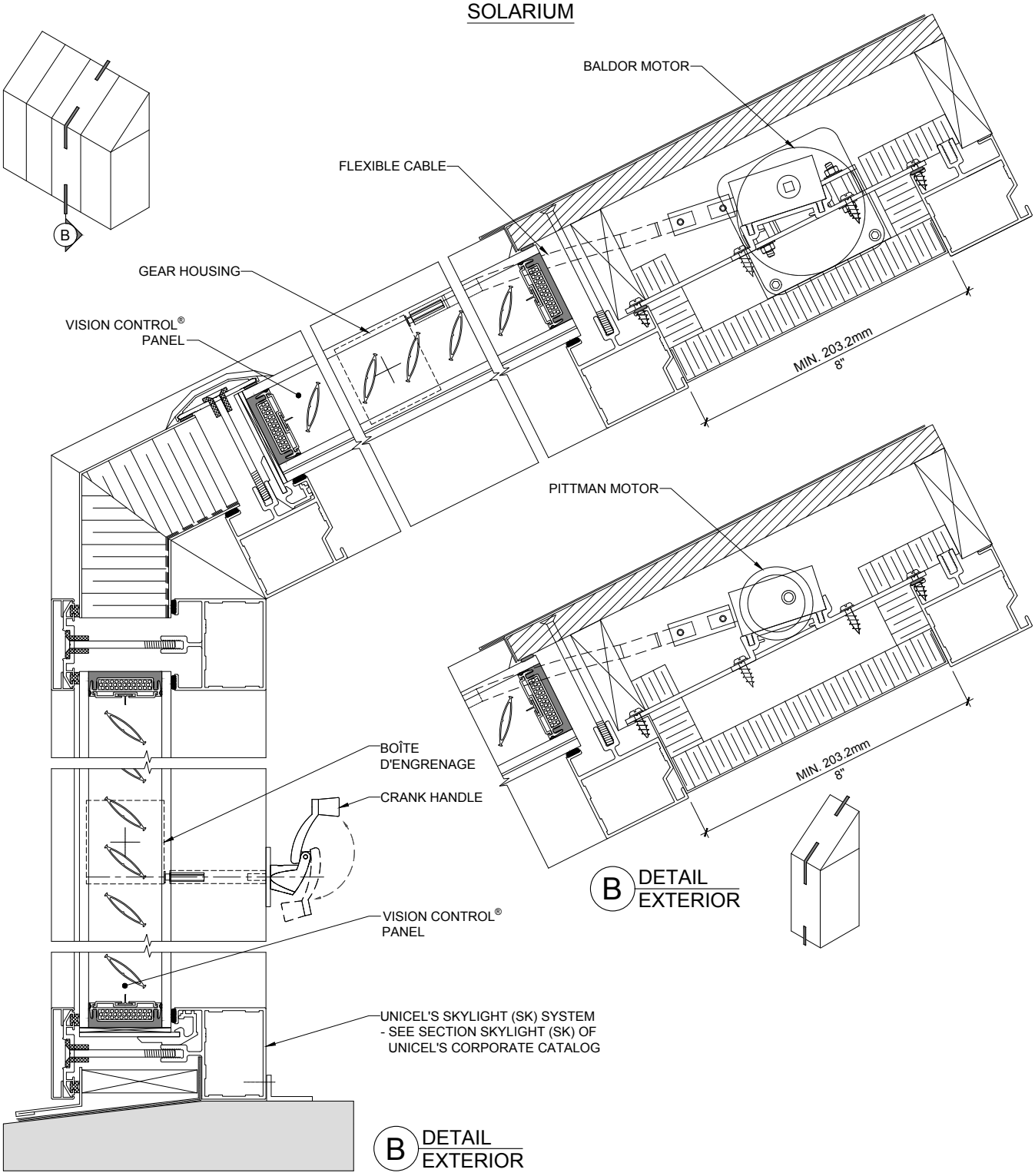

Unicel Architectural Corp.
2155 Fernand-Lafontaine
Longueuil • Québec • J4G 2J4 • Canada

VISION CONTROL®

VC 5.2

T: 800.668.1580 | 450.670.6844 • F: 866.496.2628 | 450.670.7144
E: unicel@unicelarchitectural.com • www.unicelarchitectural.com

SLOPED GLAZING

1- MOTOR
2- CORNER DRIVE
3- GEAR HOUSING 2 1/8" x 2 9/32" (54mm x 57.9mm)
4- FLEXIBLE CABLE
5- RIGID SHAFT 5/8" Ø (15.9mm)
6- VISION CONTROL® PANEL
7- ALUMINUM SUPPORT
8- ALUMINUM STRUCTURE
9- SETTING BLOCK

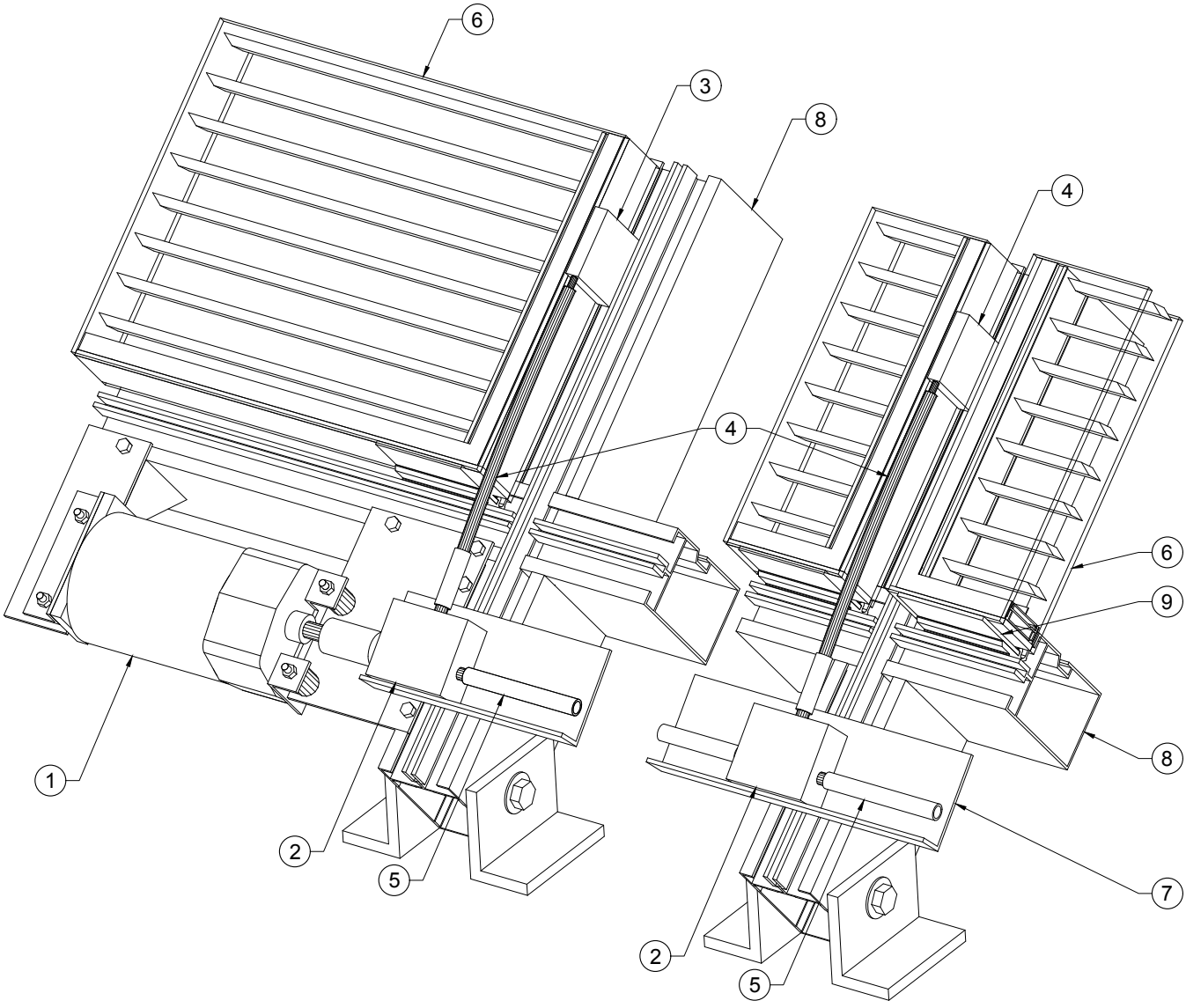

Unicel Architectural Corp.
2155 Fernand-Lafontaine
Longueuil • Québec • J4G 2J4 • Canada

VC 5.3

Storage Instructions

A. In Crates

Crates must be kept upright, covered, ventilated and in a dry and safe location.

B. Loose Lots

Sealed units must be upright, on blocks and in a safe and dry location. Sealed units should not be stored in a stack, or in direct sunlight as heat build-up may cause breakage. Sealed units should have a base to provide support to all component lites of the unit so that individual lites will not slide out of alignment or out of square causing seal failure or breakage.

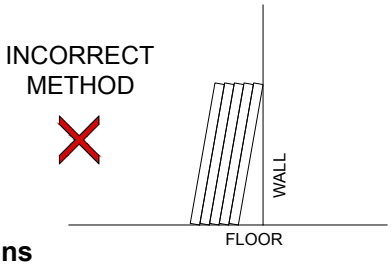

Handling Instructions

A. Extreme care must be taken when a unit is being moved. Edges and corners should be protected in order to prevent glass from fracturing. The use of a corner protector is suggested.

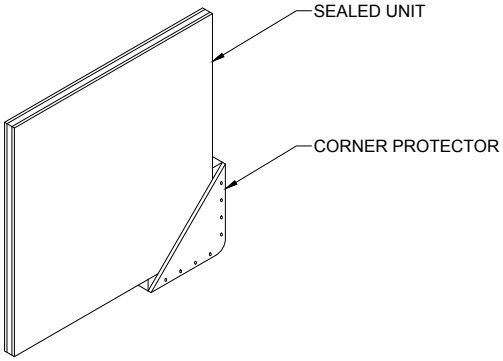

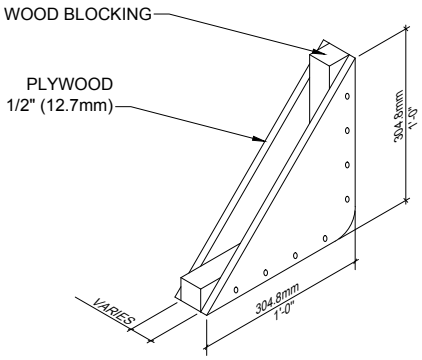

B. When moving Vision Control® sealed glass panels, always do so as indicated below, flat or the gear housing downwards.

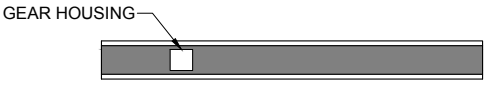

1st method : Flat

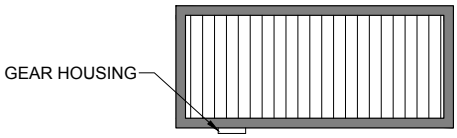

2nd method: Gear housing down

GLAZING INSTRUCTIONS

Frame/Sash

1. All framing members must be specifically designed to accept the glass specified and must have adequate structural strength to support the weight of the glass without deformation.

2. Frame and/or sash must be level, plumb, square and in plane and also be free of any glazing obstruction.

3. Joints must be adequately buttered with sealant to prevent water and air infiltration and all sill members must have weep holes to the outside.

Clearance and edge bite

1. Adequate edge and face clearances must be provided to allow the glass to float freely in the opening, without undue restriction by the framing members. The recommended clearance on both vertical edges of the units is a minimum of 3/8" (9.5mm) for thumbwheel-operated units, 1/2" (12.7mm) for units operated by crank handles, knobs or Pittman and Baldor motors and 1 1/8" for Somfy motors.

2. Adequate bite is mandatory to maintain a watertight, weather-proof seal as well as retain the glass in the opening under conditions of wind loading and deformation of the framing members.

Setting blocks

1. Neoprene setting blocks should be used on the bottom edge of each sealed unit. Place setting blocks at the end points, under the metallic plates.

Sealing materials

1. For channel glazing, use only a non-hardening, non-corrosive, gun-applied sealant specifically recommended by the sealant manufacturer for the type of glass specified

2. In no case shall glazing be performed with any oleo-resinous or oil-base compounds, nor shall any glazing sealant be diluted or thinned with any solvent.

3. Never fill the space between the bottom edge of the glass and the sill. This will interfere with the weepage system.

4. All sealants must be applied to provide an absolute watertight seal; on insulating glass units, sealant must contact the glass a minimum of 1/8” above the metal edge protection.

5. Sash with neoprene or structural neoprene gaskets must have a supplementary wet seal applied between the gasket and the glass, at the bottom edge (sill) of the glass and 6” (152.4mm) up on each jamb. Sill section of all structural neoprene gaskets must have weep holes to the exterior.

6. Special care must be taken when glazing laminated glass, polycarbonates and glass-clad polycarbonates, as they may react unfavorably with certain sealant components. Sealants made of 100% solid components, containing no solvents, must be used. Verify with your sealant manufacturer.

7. All surfaces to be sealed must be completely clean and dry. Verify with sealant manufacturer's recommendations for proper cleaning procedures.

CRANK HANDLE OR KNOB OPERATORS

1- WORM GEAR SHAFT
2- GEARING WHEEL
3- GEAR HOUSING 2 1/8" x 2 9/32" (54mm x 57.9mm)
4- PLASTIC COVER & SCREW #5-40 x 1/2" (12.7mm)
5A- ZINC CRANK HANDLE
5B- ALUMINUM KNOB
5C- BRASS LIGATURE-RESISTANT KNOB
6- SCREW #6 x 1/2" (12.7mm)
7A- OVAL PLATE
7B- ROUND PLATE
8- EXTENSION SHAFT
9- VISION CONTROL® PANEL
10- FRAME BY OTHERS
11- HEXAGONAL SOCKET
12- SETTING BLOCK
13- ALUMINUM BLOCK
14- BRASS ADAPTOR
15- SET SCREW

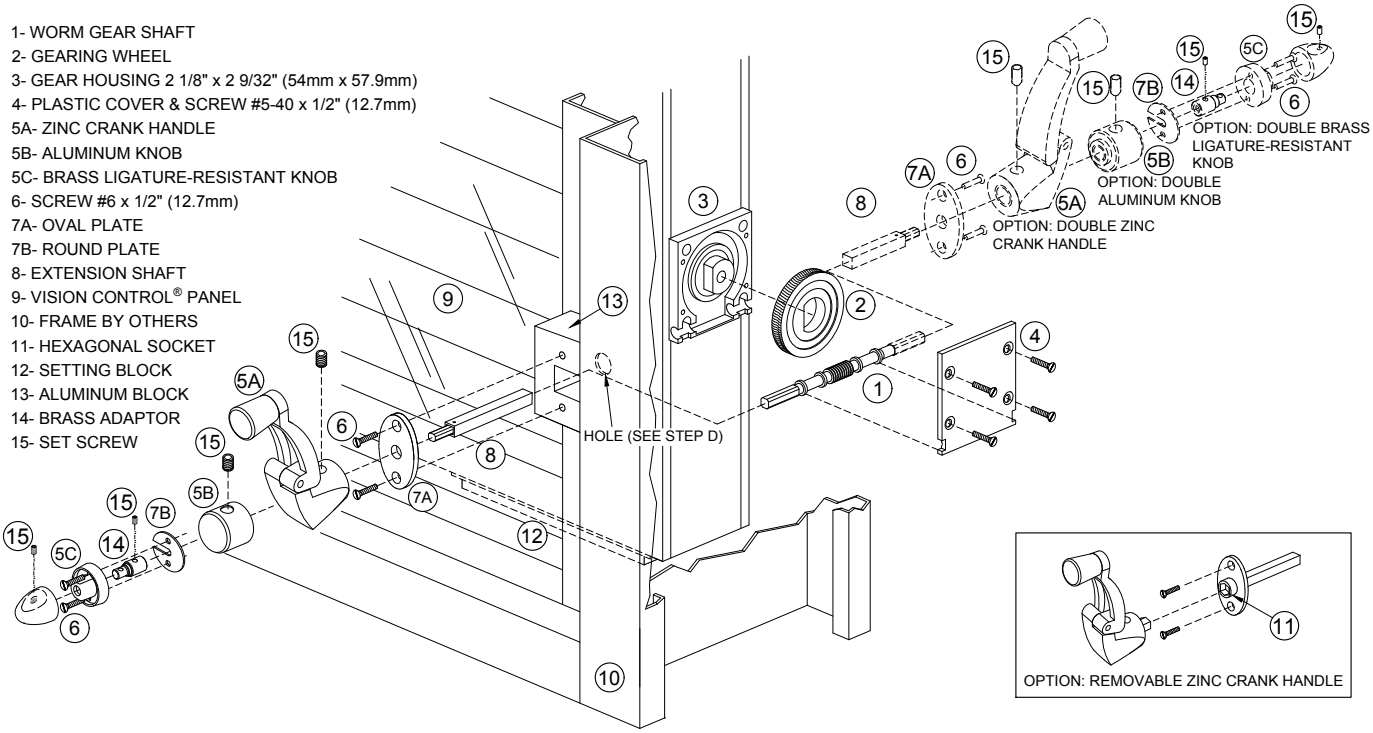

A. Install stainless steel worm gear shaft (1) into the cavity provided for it in the gear housing (3). To insert the worm gear shaft in position, center it in the gear housing and press firmly. Insert the white gearing wheel (2) on the brass shaft.

B. Make sure that the gear housing (3) is free of dirt. Screw the plastic cover (4) in place. Do not use excessive torque on screws in securing the plastic cover.

C. (Skip this step if the operator is an ligature-resistant knob (5C)). Test the functionality of the units by temporarily installing the operator (5A) or (5B) and tightening the set screw (15). The mechanism is self-reversing and should be tested as follows: Turn the operator in one direction (e.g. clockwise). When the louvers reach the closed position, continue turning 4-8 times in the same direction (e.g. clockwise) without fear of breaking the mechanism until the louvers eventually re-open. Complete two full louver cycles by turning the operator in the same direction (e.g. clockwise). Repeat these steps in the opposite direction (e.g. counter-clockwise) for two more full louver cycles.

D. Drill the following hole (behind the aluminum block (13)) in glass stop at the appropriate position (for worm gear shaft (1) according to Unicel's approved shop drawings): for the zinc crank handle (5A) and the aluminum knob (5B), drill a 5/8" (15.9mm) diameter hole; for the ABS ligature-resistant knob (5C), drill a 3/8" (9.5mm) diameter hole.

E. Install setting blocks (12) under the metal plates glued to the unit. Make sure they are sufficiently rigid to secure glass panel into its permanent position.

F. Install the Vision Control® panel (9) in the opening which must be level, plumb, square and in plane. Make sure the shaft (1) is centered in the hole drilled in step D.

G. If necessary, install aluminum supporting block (13) by securing with screws.

H. According to operator:
1. Zinc crank handle: Screw the oval plate (7A), the crank handle (5A) and extension shaft (8) into the the frame with screws (6). Tighten the set screw (15) of the crank handle (5A) if loose.
2. Aluminum knob: Screw the oval plate (7A), the knob (5B) and extension shaft (8) into the the frame with screws (6). Tighten the set screw (15) of the knob (5B) if loose.
3. Brass ligature-resistant knob: Assemble the extension shaft (8) with the round plate (7B) and the brass adaptor (14) and tighten the first set screw. Fix the assembly and the base of the knob (5C) into the frame with screws (6). Push the knob (5C) into its base and tighten the second set screw (15).

Unicel Architectural Corp.
2155 Fernand-Lafontaine
Longueuil • Québec • J4G 2J4 • Canada

VISION CONTROL®

VC 6.3

FULL THUMBWHEEL OPERATOR

IMPORTANT NOTE:

Various thumbwheel diameters may occur throughout this order. Please refer to approved shop drawings to identify the proper thumbwheel diameter size to install.

This operation must be performed before installing the sealed units in their respective openings.

Test the functionality of the units by turning the thumbwheel in one direction (e.g. clockwise). When the louvers reach the closed position, continue turning in the same direction (e.g. clockwise) without fear of breaking the mechanism until the louvers eventually re-open. Complete two full louver cycles by turning the operator, always in the same direction (e.g. clockwise). Repeat these steps in the opposite direction (e.g. counter-clockwise) for two more full louver cycles.

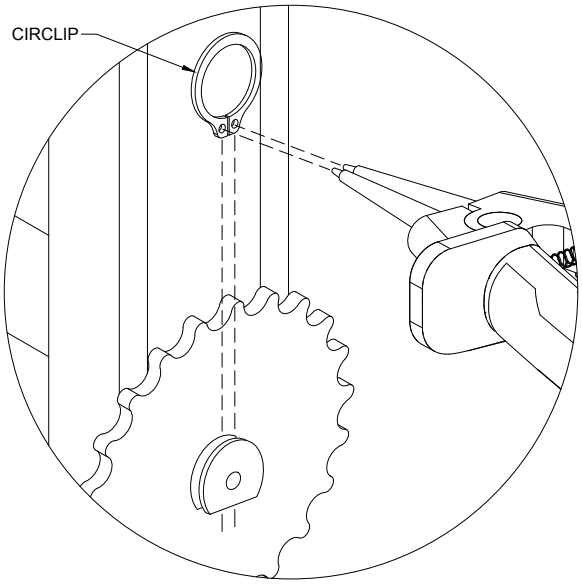

STEP 1

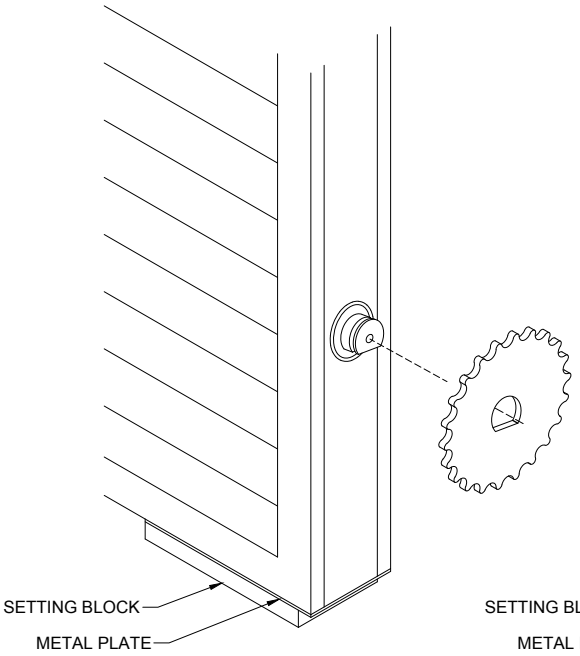

STEP 2

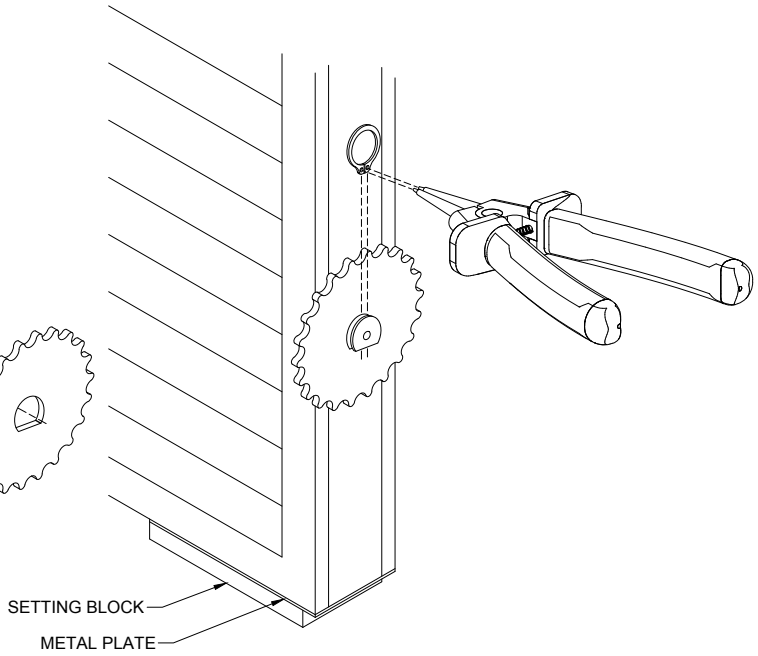

ADDITIONAL INSTRUCTIONS

Install setting blocks under the metal plates glued to each unit. Make sure they are sufficiently rigid to secure the glass panels into their permanent position. The units must be level, plumb, square and in plane. Install the glass stops, which should have been notched at predetermined locations according to approved shop drawings, to accomodate thumbwheel operator.

FAN-SHAPED THUMBWHEEL OPERATORS

IMPORTANT NOTE:

Various thumbwheel diameters may occur throughout this order.
Please refer to approved shop drawings to identify the proper thumbwheel diameter size to install.

This operation must be performed before installing the glass units in their respective openings.
Follow the instructions for either left side or right side, as required.

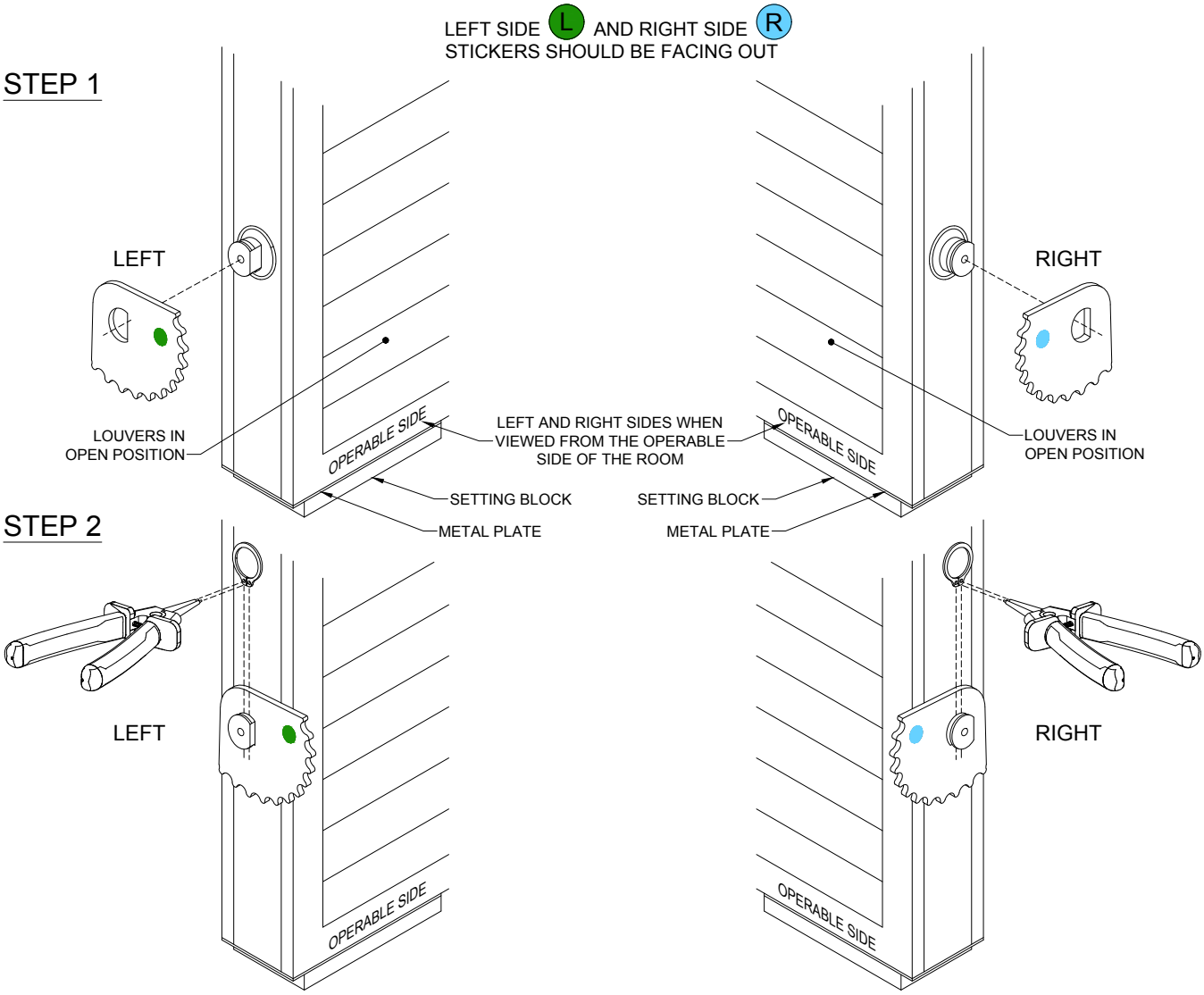

ADDITIONAL INSTRUCTIONS

Install setting block under the metal plates glued to each unit. Make sure they are sufficiently rigid to secure the glass panels into their permanent position. The units must be level, plumb, square and in plane. Install the glass stops, which should have been notched at predetermined locations according to approved shop drawings, to accomodate thumbwheel operator.

FAN-SHAPED THUMBWHEEL OPERATORS

IMPORTANT NOTE:

Various thumbwheel diameters may occur throughout this order. Please refer to approved shop drawings to identify the proper thumbwheel diameter size to install.

This operation must be performed before installing the glass units in their respective openings.

Applicable for both left and right sides.
If this orientation is not observed, remove the thumbwheel, flip it and re-install it.

STEP 3

LEFT SIDE FAN-SHAPED THUMBWHEEL

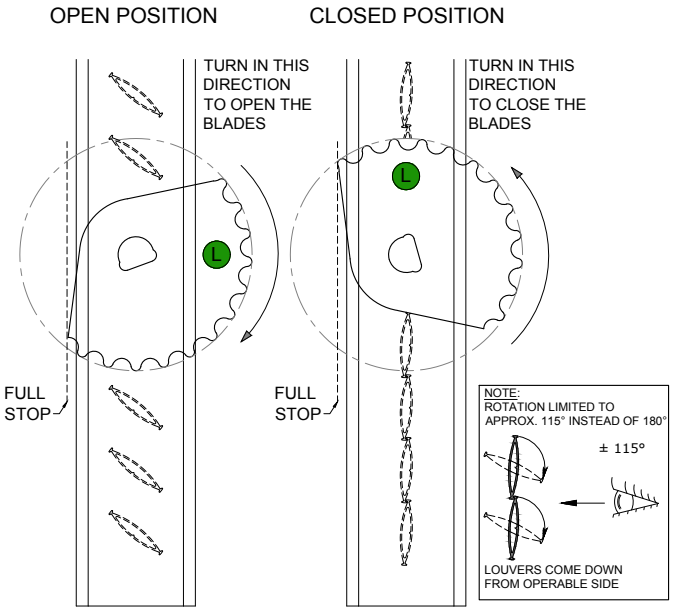

RIGHT SIDE FAN-SHAPED THUMBWHEEL

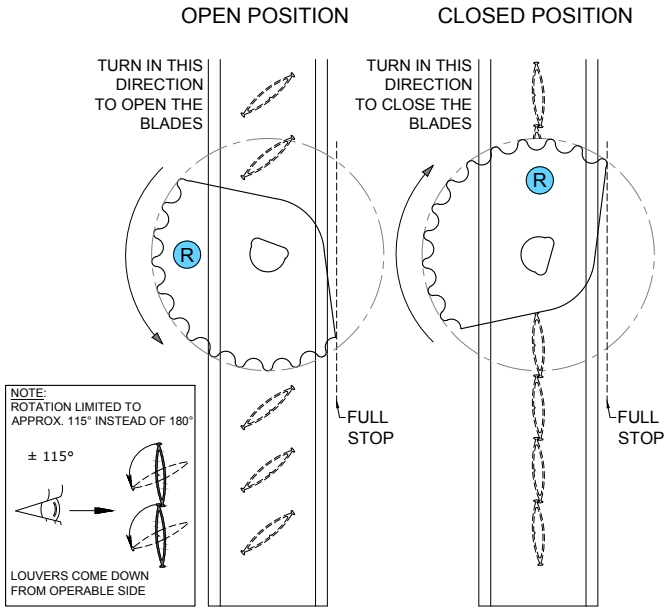

FAN-SHAPED THUMBWHEEL OPERATORS FOR VISION CONTROL® UNITS WITH DOUBLE WHEELS

IMPORTANT NOTE FOR INSTALLATION:

1. **Do not turn** the brass hubs of the glass units!!
2. Install the wheels, sticker side facing out. **Do not turn the wheels in any direction**.
3. If the wheels are turned, it could cause irreversible damage to the mechanism of the unit.

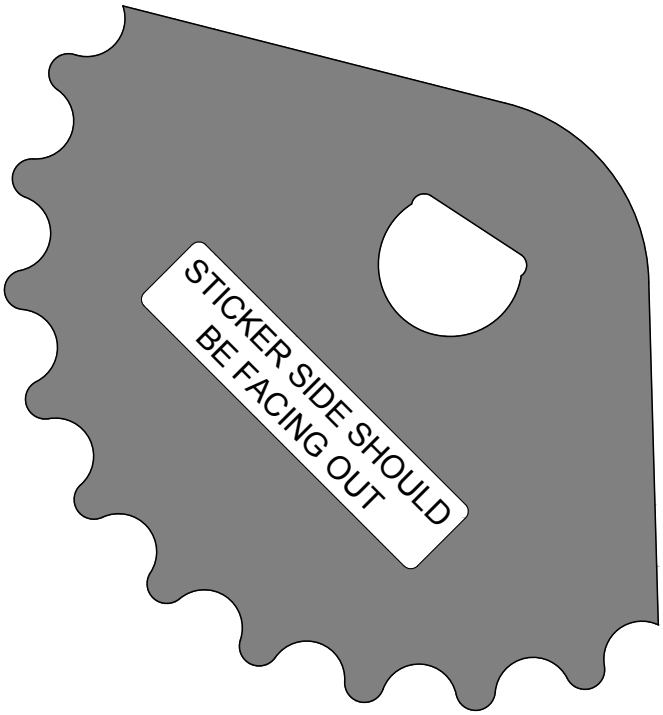

4. Install Vision Control® glass in openings according to shop drawings. Install glass stops at perimeter, on both sides of the window.
5. Thumbwheels may now be turned.

UNICEL
ARCHITECTURAL

VISION CONTROL® INSTALLATION

FOR DOORS: VISION CONTROL® FURNISHED FACTORY-GLAZED IN UNICEL'S ALUMINUM TRIMS

STEP A

REMOVE SNAP-ON TRIM AT PERIMETER

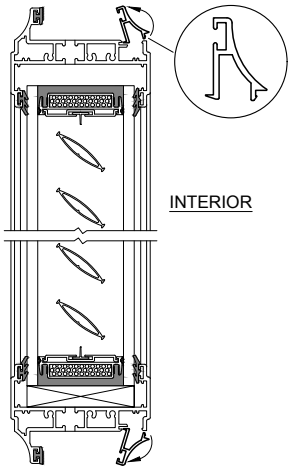

VISION CONTROL® IS FURNISHED FACTORY-GLAZED IN UNICEL'S ALUMINUM TRIMS FOR 1 3/4" (44.5mm) THICK DOORS

STEP B

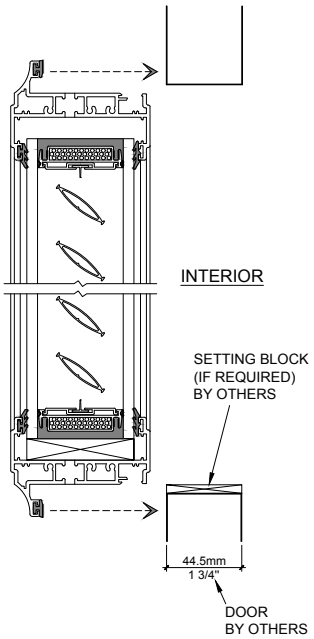

STEP C

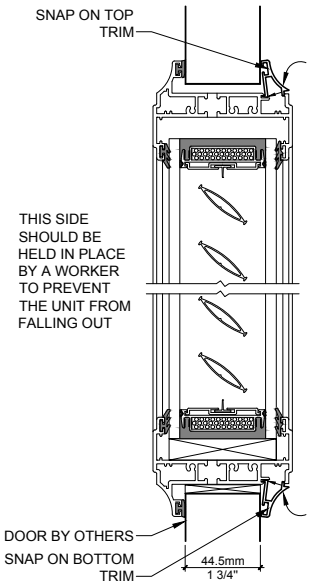

STEP D*

*THIS STEP IS FOR MENTAL HEALTH APPLICATIONS ONLY

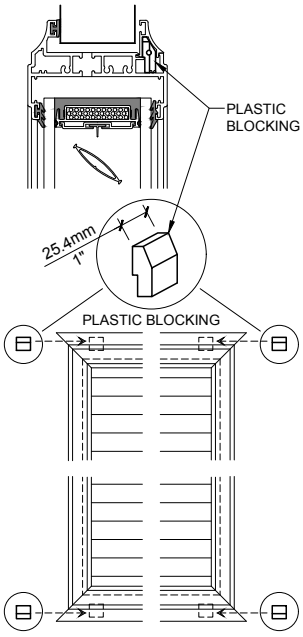

STEP E

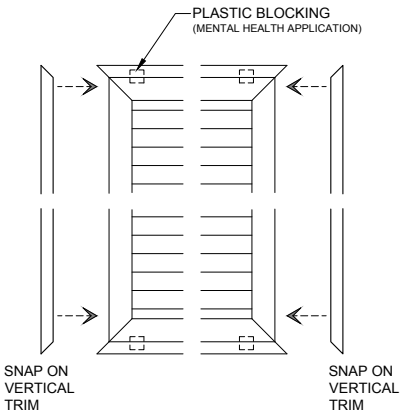

STEP F

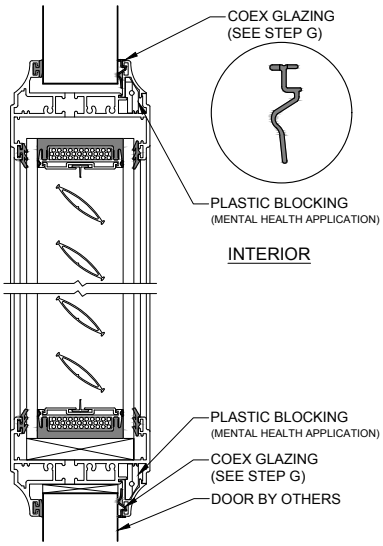

STEP G

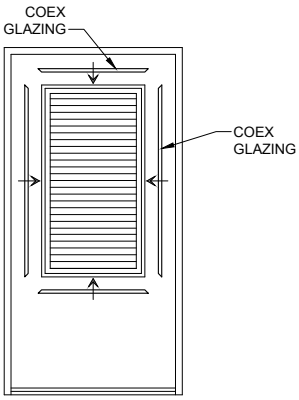

COEX GLAZING INSTALLATION

VIEWED FROM INTERIOR SIDE

Unicel Architectural Corp.
2155 Fernand-Lafontaine
Longueuil • Québec • J4G 2J4 • Canada

VISION CONTROL®

VC 6.6

T: 800.668.1580 | 450.670.6844 • F: 866.496.2628 | 450.670.7144
E: unicel@unicelarchitectural.com • www.unicelarchitectural.com

MAINTENANCE INSTRUCTIONS

Cleaning and maintenance of glass:

- Routinely clean using ordinary window-washing techniques.
- For best results, use liquid glass cleaners or mild household detergents. Do not use cleaning compounds containing fluorine, strong acids, corrosive alkaline detergents or from glass surfaces.

Cleaning and maintenance of zinc crank handle, aluminum knobs, or polymer thumbwheel:

- If the crank handle or knob becomes loose, just tighten the allen screw with an allen key on the side of the crank handle or knob.
- Clean the crank handle or the knob with liquid glass cleaners and the thumbwheel with cleaners used for polymer.

Cleaning and maintenance of aluminum blocks, oval plates, knobs, and aluminum trims:

- Mild soaps or detergents ruled safe for bare hands should be safe for coated aluminum. Stronger detergents such as some dishwasher detergents should be carefully spottested. After cleaning, the finish should be thoroughly rinsed with clean water and dried.
- Avoid abrasive cleaners. Strong solvents or strong cleaner concentrations can cause damage to painted surfaces. Overcleaning or excessive rubbing can do more harm than good.
- Abrasive materials such as steel wool and abrasive brushes can wear and harm finishes. Do not scour painted surfaces.
- Never use paint removers, aggressive alkaline, acid or abrasive cleaners. Do not use trisodium phosphate, highly alkaline or highly acid cleaners. Always do a test surface.

UNICEL
ARCHITECTURAL

VISION CONTROL®
WARRANTY STATEMENT

During a period of twenty (20) years from date of manufacture, depending on the type of unit construction and the use to which the unit is put, Vision Control® insulating glass units installed in interior applications are warranted not to develop, under normal conditions, material obstruction of vision as a result of dust or film formation on the internal glass surface caused by failure of the hermetic seal other than through glass breakage. Additionally, this warranty covers any internal parts for malfunction, mechanical failure or premature wear under normal use. Baldor and Pittman motors are covered up to a one (1)-year period. Somfy motors are covered up to a five (5)-year period. All other motorized elements are covered up to a one (1)-year period. Glass edge separation, changes in properties of interlayer, delamination of glass, glass coatings, and material obstruction through glass not caused by seal failure, are not covered beyond the warranty period offered by the original supplier of the material. This warranty does not apply to glass breakage or vandalism, and does not cover replacement and labor costs. Units installed in exterior applications and without breather tubes or capillary breather tubes are covered up to a ten (10)-year period.

This warranty is effective only if installation is made in accordance with Unicel's specific instructions and does not apply to units damaged by improper handling or installation. This represents Unicel's maximum liability. The obligations of Unicel under this warranty are limited to the repair or replacement, at Unicel's option, of defective parts of the goods. This warranty does not apply to replacement units beyond the original twenty (20)-year (or ten (10)-year) period to which the original unit is subjected. Unicel will not be liable for any other expenses involved in the removal of defective units, installation of replacement units, or any other incidental or consequential damages.

Unicel does not authorize any person, dealer, or distributor to create for it any obligation or liability in connection with the goods. Leakage will be the sole responsibility of the glass contractor or installer.

This warranty shall be void if the units are subjected to abnormal stresses from the load application of heat, excessive vibration, building or foundation movement; if glazed with materials which do not remain resilient for the life of the warranty, or if the methods and materials used in glazing the units do not completely repel water for the life of the warranty. Unicel reserves the right to inspect, in the field, any part or unit which is allegedly defective, or to request that the unit(s) be returned to Unicel for inspection.

This warranty is valid only if contracts have been paid in full.

Unicel Architectural Corp.

Unicel Architectural Corp.
2155 Fernand-Lafontaine
Longueuil • Québec • J4G 2J4 • Canada

VISION CONTROL®

VC 7.2

T: 800.668.1580 | 450.670.6844 • F: 866.496.2628 | 450.670.7144
E: unicel@unicelarchitectural.com • www.unicelarchitectural.com